Sept. 2, 1941. J. F. KUBALEK 2,254,948

INSECT KILLING DEVICE

Filed Dec. 13, 1939 2 Sheets-Sheet 1

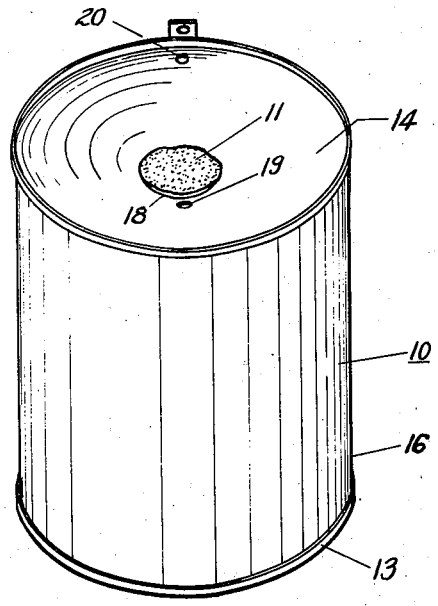

Fig. 1

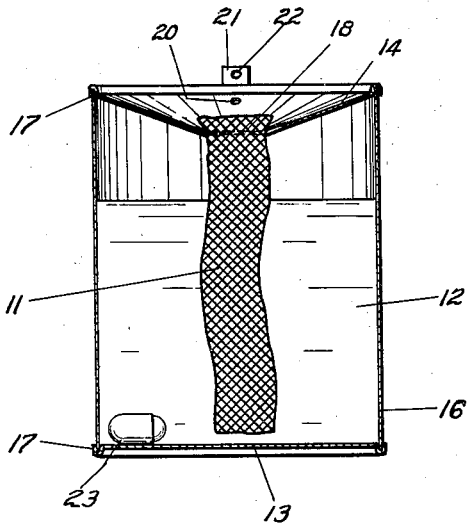

Fig. 2

INVENTOR.
JOHN FRANK KUBALEK
BY Flournoy Corey.
ATTORNEY.