US005949948A

United States Patent [19]

Krause et al.

[11] **Patent Number: 5,949,948**

[45] **Date of Patent: *Sep. 7, 1999**

[54] **METHOD AND APPARATUS FOR IMPLEMENTING PLAYBACK FEATURES FOR COMPRESSED VIDEO DATA**

[75] Inventors: **Edward A. Krause**, El Cerrito; **Paul Shen**; **Adam S. Tom**, both of San Francisco, all of Calif.

[73] Assignee: **Imedia Corporation**, San Francisco, Calif.

[*] Notice: This patent issued on a continued prosecution application filed under 37 CFR 1.53(d), and is subject to the twenty year patent term provisions of 35 U.S.C. 154(a)(2).

[21] Appl. No.: **08/560,732**

[22] Filed: **Nov. 20, 1995**

[51] **Int. Cl.**[6] **H04N 5/76**

[52] **U.S. Cl.** **386/6**; 68/110; 68/125

[58] **Field of Search** 358/335, 312; 360/10.1, 10.3; 386/5, 6, 68, 110, 107, 125; H04N 5/92, 5/78, 5/76

[56] **References Cited**

U.S. PATENT DOCUMENTS

5,168,353	12/1992	Walker et al.	358/86
5,267,334	11/1993	Normille et al.	382/56
5,282,049	1/1994	Hatakenaka et al.	358/335
5,305,113	4/1994	Iwamura et al.	358/312
5,371,551	12/1994	Logan et al.	348/571
5,377,051	12/1994	Lane et al.	360/33.1
5,390,027	2/1995	Henmi et al.	360/10.3
5,398,143	3/1995	Strolle et al.	360/48
5,438,423	8/1995	Lynch et al.	358/335
5,442,390	8/1995	Hooper et al.	348/7
5,526,131	6/1996	Strolle et al.	358/335
5,535,008	7/1996	Yamagishi et al.	358/342
5,568,274	10/1996	Fujinami et al.	386/107

FOREIGN PATENT DOCUMENTS

0 396 285 A2	11/1990	European Pat. Off.	H04N 5/92
0473416	3/1992	European Pat. Off.	H04N 5/78
0620683	10/1994	European Pat. Off.	H04N 5/92
0637888	2/1995	European Pat. Off.	H04N 5/92
0 674 448 A2	9/1995	European Pat. Off.	H04N 7/52
406133268	5/1994	Japan	H04N 5/92
406276485	9/1994	Japan	H04N 5/92

OTHER PUBLICATIONS

Aravind, Rangarajan et al., Image and Video Coding Standards, *AT&T Technical Journal*, Jan./Feb. 1993, pp. 67–91.

Primary Examiner—Brian L. Casler
Assistant Examiner—Luanne P. Din
Attorney, Agent, or Firm—McCutchen, Doyle, Brown & Enersen,LLP

[57] **ABSTRACT**

A compressed video playback system which eliminates playback mode transition artifacts. Transitions between various playback modes are effected in such a manner that transition artifacts are eliminated by delaying playback mode transitions until appropriate frames of data are detected for propagation to the compressed video decoder. In addition, compressed video data retrieval methods are improved for supporting multi-speed playback modes in both forward and reverse directions in an optimal manner.
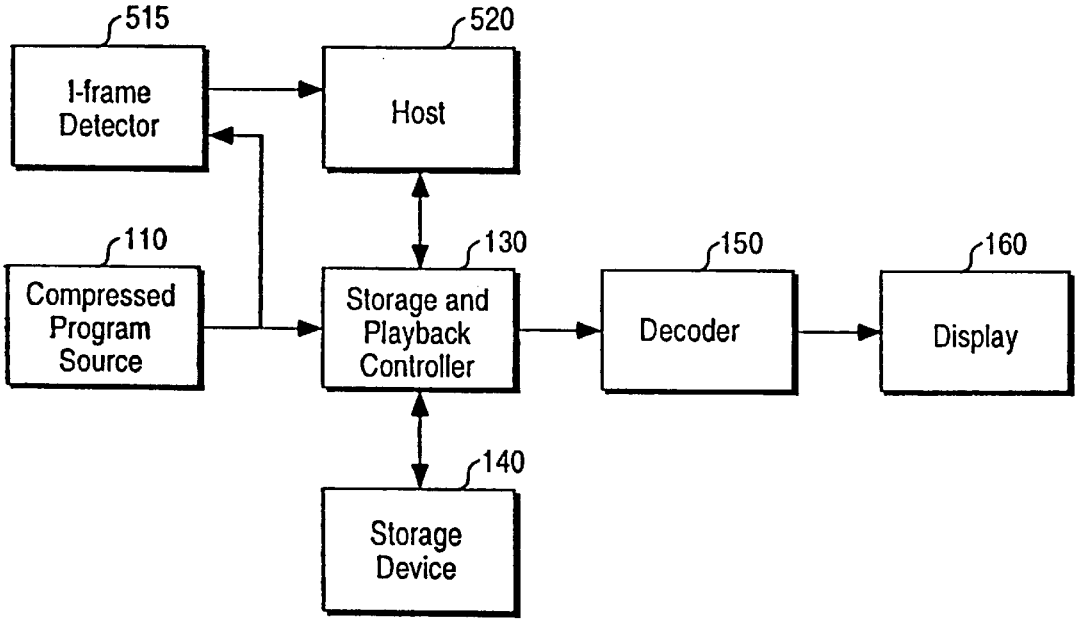
28 Claims, 5 Drawing Sheets