US008739548B2

(12) **United States Patent**
Petty

(10) **Patent No.: US 8,739,548 B2**
(45) **Date of Patent: Jun. 3, 2014**

(54) **SLIDING RAMP NOZZLE SYSTEM FOR A GAS TURBINE ENGINE**

(75) Inventor: **Dale William Petty**, Wallingford, CT (US)

(73) Assignee: **United Technologies Corporation**, Hartford, CT (US)

(*) Notice: Subject to any disclaimer, the term of this patent is extended or adjusted under 35 U.S.C. 154(b) by 1398 days.

(21) Appl. No.: **11/960,936**

(22) Filed: **Dec. 20, 2007**

(65) **Prior Publication Data**

US 2009/0158703 A1 Jun. 25, 2009

(51) **Int. Cl.**
F02K 1/00 (2006.01)
B63H 11/10 (2006.01)

(52) **U.S. Cl.**
USPC **60/771**; 60/231; 239/265.19

(58) **Field of Classification Search**
USPC 60/226.1, 228, 229, 231, 230, 232, 233, 60/235, 770, 771; 239/265.17, 265.19, 239/265.25
See application file for complete search history.

(56) **References Cited**

U.S. PATENT DOCUMENTS

3,449,914 A * 6/1969 Brown 405/215
3,979,065 A * 9/1976 Madden 239/127.3
4,064,692 A * 12/1977 Johnson et al. 60/762
4,132,069 A * 1/1979 Adamson et al. 60/226.1
4,175,384 A * 11/1979 Wagenknecht et al. 60/226.3
4,391,184 A * 7/1983 Yamane et al. 92/100
4,418,708 A 12/1983 Schulze et al.
4,523,603 A 6/1985 Peikert
4,813,229 A * 3/1989 Simmons 60/204
5,016,818 A 5/1991 Nash et al.
5,186,390 A 2/1993 Enderle et al.
5,261,227 A 11/1993 Giffin, III
5,261,604 A 11/1993 Meyer
5,301,901 A 4/1994 Kutschenreuter, Jr.
5,305,599 A * 4/1994 Marvin 60/226.3
5,307,624 A * 5/1994 Even-Nur et al. 60/226.3
5,351,476 A * 10/1994 Laborie et al. 60/785
5,351,888 A * 10/1994 Taylor et al. 239/127.3
5,402,638 A 4/1995 Johnson
5,402,963 A 4/1995 Carey et al.
5,404,713 A 4/1995 Johnson
6,000,635 A 12/1999 Justice
6,793,175 B1 9/2004 Sanders et al.
6,857,600 B1 2/2005 Walker et al.
6,948,317 B2 9/2005 Renggli et al.
7,055,307 B2 6/2006 Wehner
7,096,662 B2 8/2006 Wehner
7,134,271 B2 11/2006 Baughman et al.
7,140,174 B2 11/2006 Johnson
7,144,221 B2 12/2006 Giffin
7,188,467 B2 3/2007 Johnson
7,216,475 B2 5/2007 Johnson
7,246,484 B2 7/2007 Giffin, III et al.
7,681,399 B2 * 3/2010 Orlando et al. 60/770

* cited by examiner

Primary Examiner — Gerald L Sung
(74) *Attorney, Agent, or Firm* — Carlson, Gaskey & Olds P.C.

(57) **ABSTRACT**

A regulator system includes a slidable ramp intermediate a secondary flow path and a primary flow path of a gas turbine engine nozzle section.
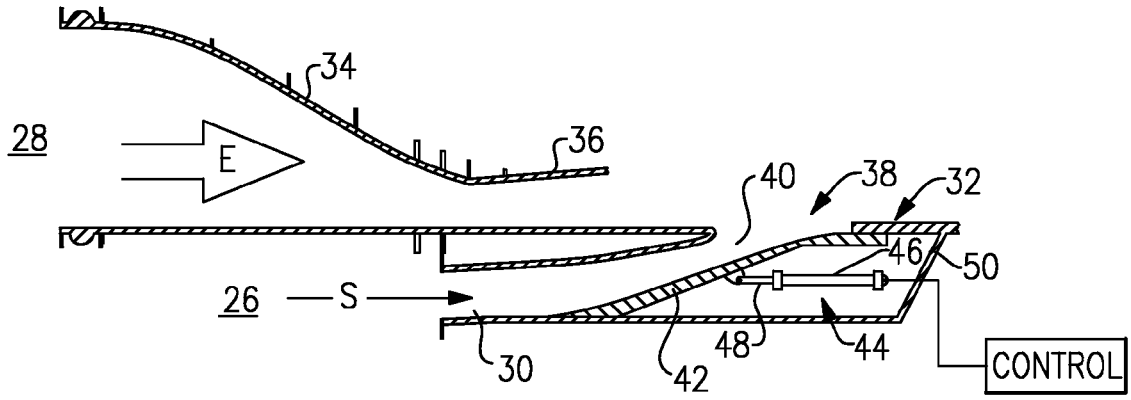
23 Claims, 3 Drawing Sheets