US006837848B2

(12) **United States Patent**
Bonner et al.

(10) **Patent No.: US 6,837,848 B2**
(45) **Date of Patent: Jan. 4, 2005**

(54) **METHODS AND APPARATUS FOR ACCESSING AND STABILIZING AN AREA OF THE HEART**

(75) Inventors: **Matthew D. Bonner**, Plymouth, MN (US); **Paul A. Pignato**, Stacy, MN (US); **Scott E. Jahns**, Hudson, WI (US); **Raymond W. Usher**, Coon Rapids, MN (US)

(73) Assignee: **Medtronic, Inc.**, Minneapolis, MN (US)

(*) Notice: Subject to any disclaimer, the term of this patent is extended or adjusted under 35 U.S.C. 154(b) by 203 days.

(21) Appl. No.: **10/342,932**

(22) Filed: **Jan. 15, 2003**

(65) **Prior Publication Data**

US 2004/0138531 A1 Jul. 15, 2004

(51) **Int. Cl.**[7] **A61B 1/00**
(52) **U.S. Cl.** **600/114**; 600/37; 600/508
(58) **Field of Search** 600/114, 37, 374, 600/375, 508, 156, 564, 565; 604/92; 606/167, 153

(56) **References Cited**

U.S. PATENT DOCUMENTS

3,902,501 A		9/1975	Citron et al.	128/418
4,815,478 A		3/1989	Buchbinder et al.	128/772
4,898,577 A		2/1990	Badger et al.	604/53
4,940,062 A		7/1990	Hampton et al.	128/772
4,991,578 A		2/1991	Cohen	128/419 D
5,071,428 A		12/1991	Chin et al.	606/184
5,076,285 A		12/1991	Hess et al.	128/186
5,336,252 A		8/1994	Cohen	607/119
5,452,733 A		9/1995	Sterman et al.	128/898
5,464,447 A		11/1995	Fogarty et al.	607/129
5,545,200 A		8/1996	West et al.	607/122
5,716,392 A		2/1998	Bourgeois et al.	607/132
5,827,216 A		10/1998	Igo et al.	604/21
5,868,770 A		2/1999	Rygaard	606/167
5,875,782 A		3/1999	Ferrari et al.	128/898
5,972,013 A		10/1999	Schmidt	606/185
6,080,175 A		6/2000	Hogendijk	606/185
6,156,009 A		12/2000	Grabek	604/117
6,231,518 B1		5/2001	Grabek et al.	600/508
6,251,092 B1		6/2001	Qin et al.	604/95.01
6,332,468 B1		12/2001	Benetti	128/898
6,394,948 B1		5/2002	Borst et al.	600/37
6,423,051 B1		7/2002	Kaplan et al.	604/506
6,666,844 B1	*	12/2003	Igo et al.	604/115

* cited by examiner

Primary Examiner—Beverly M. Flanagan
(74) *Attorney, Agent, or Firm*—Thomas G. Berry; Jeffrey J. Hohenshell

(57) **ABSTRACT**

A tubular suction tool for accessing an anatomic surface or anatomic space and particularly the pericardium to access pericardial space and the epicardial surface of the heart to implant cardiac leads in a minimally invasive manner are disclosed. The suction tool incorporates a suction pad concave wall defining a suction cavity, a plurality of suction ports arrayed about the concave wall, and a suction lumen, to form a bleb of tissue into the suction cavity when suction is applied. The suction cavity extends along one side of the suction pad, so that the suction pad and suction cavity can be applied tangentially against a tissue site. The suction tool can incorporate light emission and video imaging of tissue adjacent the suction pad. A working lumen terminating in a working lumen port into the suction cavity enables introduction of tools, cardiac leads, and other instruments, cells, drugs or materials into or through the tissue bleb drawn into the suction cavity.
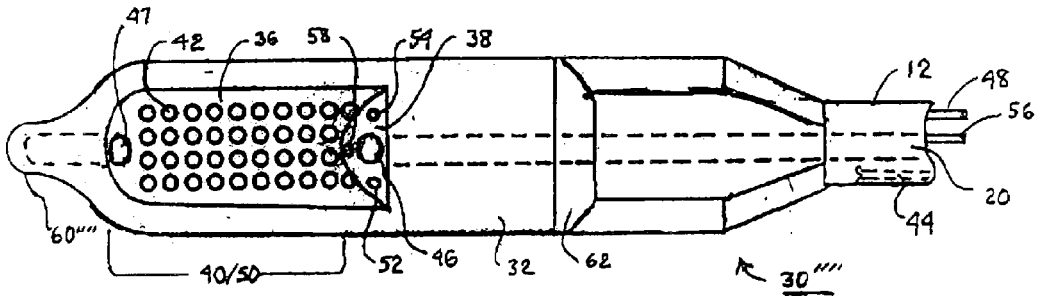
24 Claims, 11 Drawing Sheets