US009636948B2

(12) **United States Patent**
Hillaert et al.

(10) **Patent No.: US 9,636,948 B2**
(45) **Date of Patent: May 2, 2017**

(54) **LUGGAGE ARTICLE WITH CANTILEVERED WHEEL BRACKET HAVING ELONGATED ARMS**

(71) Applicant: **Samsonite IP Holdings S.ar.l.**, Luxembourg (LU)

(72) Inventors: **Rik Hillaert**, Oudenaarde (BE); **Vivien Cheng**, De Pinte (BE); **Wim De Vos**, Zingem (BE); **Jean-Claude Vandewalle**, Zarlardinge (BE)

(73) Assignee: **Samsonite IP Holdings S.a.r.l.**, Luxembourg (LU)

(*) Notice: Subject to any disclaimer, the term of this patent is extended or adjusted under 35 U.S.C. 154(b) by 0 days.

(21) Appl. No.: **14/514,737**

(22) Filed: **Oct. 15, 2014**

(65) **Prior Publication Data**

US 2015/0102573 A1 Apr. 16, 2015

(30) **Foreign Application Priority Data**

Oct. 15, 2013 (EP) 13188762

(51) **Int. Cl.**

A45C 5/14	(2006.01)
B60B 33/00	(2006.01)
B60B 33/04	(2006.01)

(52) **U.S. Cl.**

CPC ***B60B 33/0028*** (2013.01); ***A45C 5/14*** (2013.01); ***B60B 33/045*** (2013.01); *A45C 2005/148* (2013.01); *B60B 2200/45* (2013.01); *Y10T 16/184* (2015.01)

(58) **Field of Classification Search**

CPC B60B 33/006; B60B 33/0023; B60B 33/0081

See application file for complete search history.

(56) **References Cited**

U.S. PATENT DOCUMENTS

2,086,557	A	7/1937	Kaptuller	
2,738,542	A	3/1956	Clark, Jr.	
2,830,545	A *	4/1958	Robinson et al.	105/170

(Continued)

FOREIGN PATENT DOCUMENTS

CA	2720562	A1	10/2009
CN	201194600	Y	2/2009

(Continued)

OTHER PUBLICATIONS

Extended European Search Report dated Aug. 5, 2014, Application No. 13188762.2, 5 pages.

Primary Examiner — Hau Phan
Assistant Examiner — Jacob Meyer
(74) *Attorney, Agent, or Firm* — Dorsey & Whitney LLP

(57) **ABSTRACT**

A luggage article may include a plurality of walls together defining an outer structure of the luggage article, a wheel bracket attached to and extending from one of the walls, and a wheel attached to the wheel bracket. The wheel bracket may comprise first and second elongate arms extending along a common side of the wheel. The first and second arms may be vertically-spaced apart from one another over at least a portion of the length of the first and second arms. The configuration of the wheel bracket may result in higher shock absorption and reduced wheel noise comparative to conventional wheel brackets, and offer an improvement and alternative to conventional luggage wheel brackets.
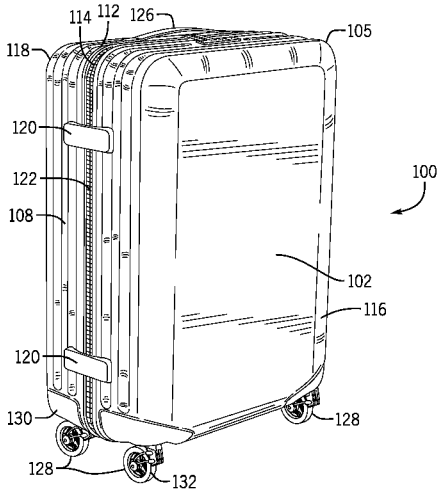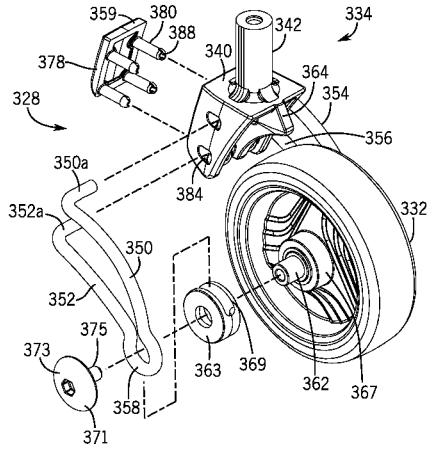
21 Claims, 8 Drawing Sheets