US009636748B2

(12) **United States Patent**
Tomita et al.

(10) **Patent No.: US 9,636,748 B2**
(45) **Date of Patent: May 2, 2017**

(54) **SURFACE-COATED CUTTING TOOL**

(75) Inventors: **Kohei Tomita**, Joso (JP); **Akira Osada**, Tokyo (JP)

(73) Assignee: **Mitsubishi Materials Corporation**, Tokyo (JP)

(*) Notice: Subject to any disclaimer, the term of this patent is extended or adjusted under 35 U.S.C. 154(b) by 110 days.

(21) Appl. No.: **14/241,681**

(22) PCT Filed: **Aug. 31, 2012**

(86) PCT No.: **PCT/JP2012/072168**
§ 371 (c)(1),
(2), (4) Date: **Apr. 30, 2014**

(87) PCT Pub. No.: **WO2013/031952**
PCT Pub. Date: **Mar. 7, 2013**

(65) **Prior Publication Data**

US 2014/0287210 A1 Sep. 25, 2014

(30) **Foreign Application Priority Data**

Aug. 31, 2011 (JP) 2011-189003
Aug. 28, 2012 (JP) 2012-187859

(51) **Int. Cl.**
B23B 27/14 (2006.01)
C23C 16/02 (2006.01)
(Continued)

(52) **U.S. Cl.**
CPC ***B23B 27/14*** (2013.01); ***C23C 16/029*** (2013.01); ***C23C 16/0272*** (2013.01);
(Continued)

(58) **Field of Classification Search**
None
See application file for complete search history.

(56) **References Cited**

U.S. PATENT DOCUMENTS

6,200,671 B1 3/2001 Lindskog et al.
7,201,956 B2 * 4/2007 Oshika C23C 16/0272 428/216
(Continued)

FOREIGN PATENT DOCUMENTS

CN 1524653 A 9/2004
CN 1616169 A 5/2005
(Continued)

OTHER PUBLICATIONS

International Search Report mailed Dec. 11, 2012 for the corresponding PCT Application No. PCT/JP2012/072168.
(Continued)

Primary Examiner — Vera Katz
(74) *Attorney, Agent, or Firm* — Leason Ellis LLP.

(57) **ABSTRACT**

A surface-coated cutting tool with a hard coating layer exhibiting an excellent flaking and chipping resistance in a high-speed heavy and intermittent cutting is provided. The vapor-deposited hard coating layer has a lower layer (Ti compound layer) and an upper layer (α-type Al_2O_3 layer). Thirty to 70% of Al_2O_3 crystal grains directly above the lower layer are oriented to (11-20) plane. Forty-five % or more of all of the Al_2O_3 crystal grains are oriented to (0001) plane. Preferably, the outermost surface layer of the lower layer is an oxygen-containing TiCN layer having oxygen content of 0.5 to 3 atomic % only within the depth region of 500 nm. The ratio of the number of Al_2O_3 crystal grains directly above the outermost surface layer to the number of crystal grains of the Ti carbonitride layer in the outermost surface layer is 0.01 to 0.5 in the interface.
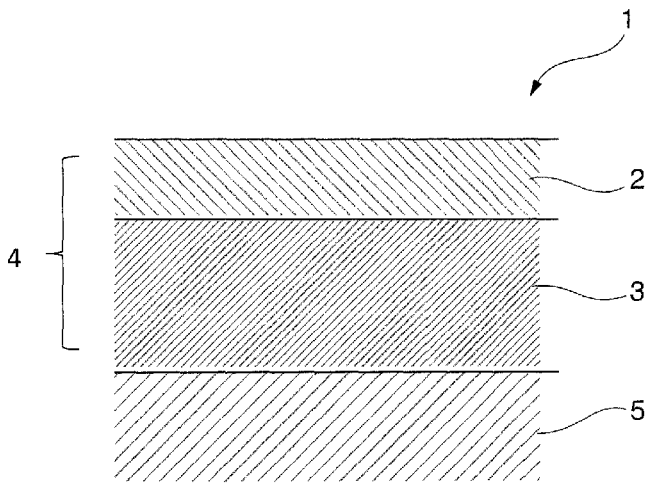
5 Claims, 4 Drawing Sheets