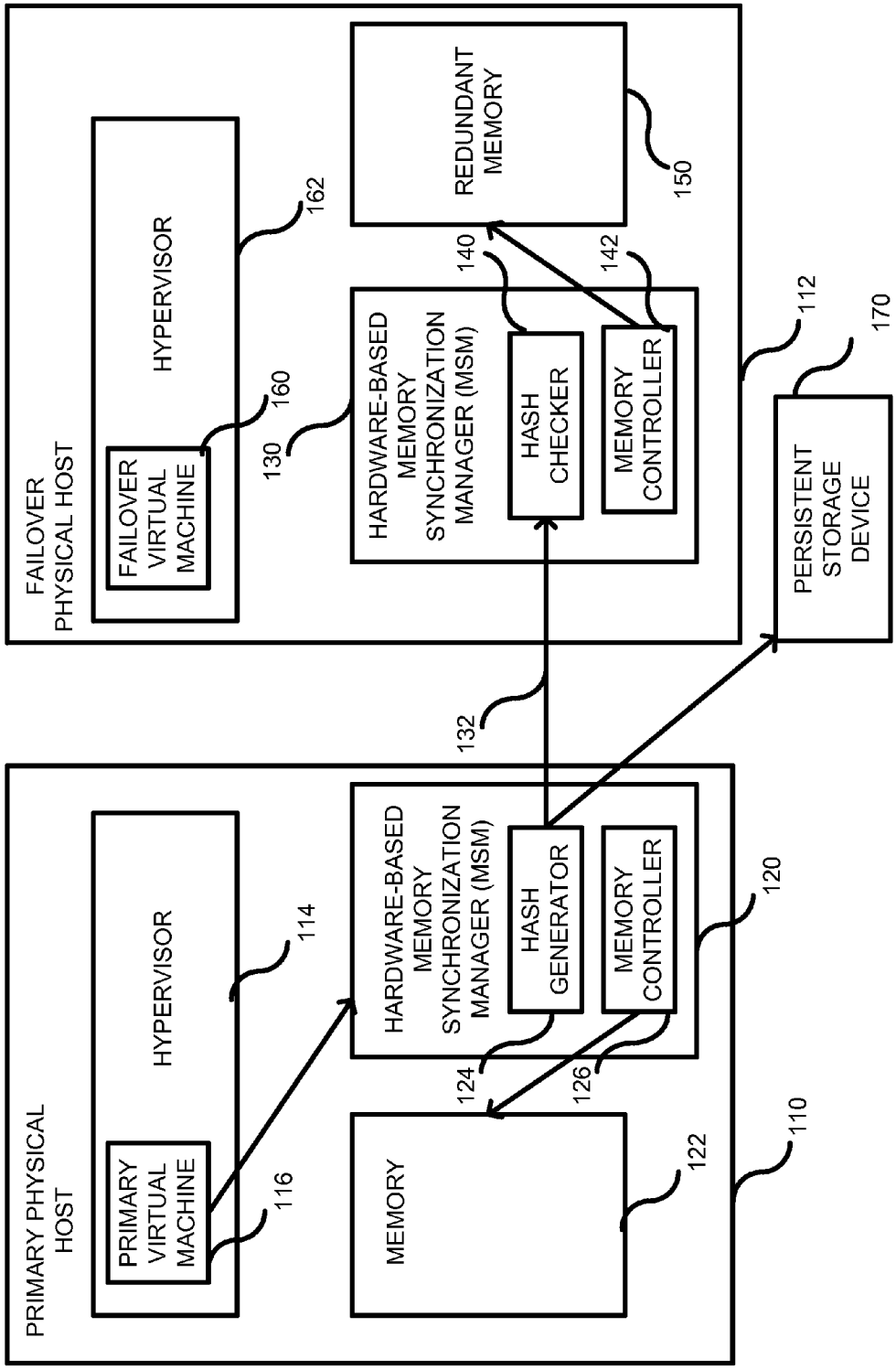
100
PRIMARY PHYSICAL HOST
HYPERVISOR
114
PRIMARY VIRTUAL MACHINE
116
HARDWARE-BASED MEMORY SYNCHRONIZATION MANAGER (MSM)
HASH GENERATOR
MEMORY CONTROLLER
120
124
126
MEMORY
122
110
132
FAILOVER PHYSICAL HOST
HYPERVISOR
162
FAILOVER VIRTUAL MACHINE
160
130
HARDWARE-BASED MEMORY SYNCHRONIZATION MANAGER (MSM)
HASH CHECKER
MEMORY CONTROLLER
140
142
REDUNDANT MEMORY
150
112
PERSISTENT STORAGE DEVICE
170

FIG. 1