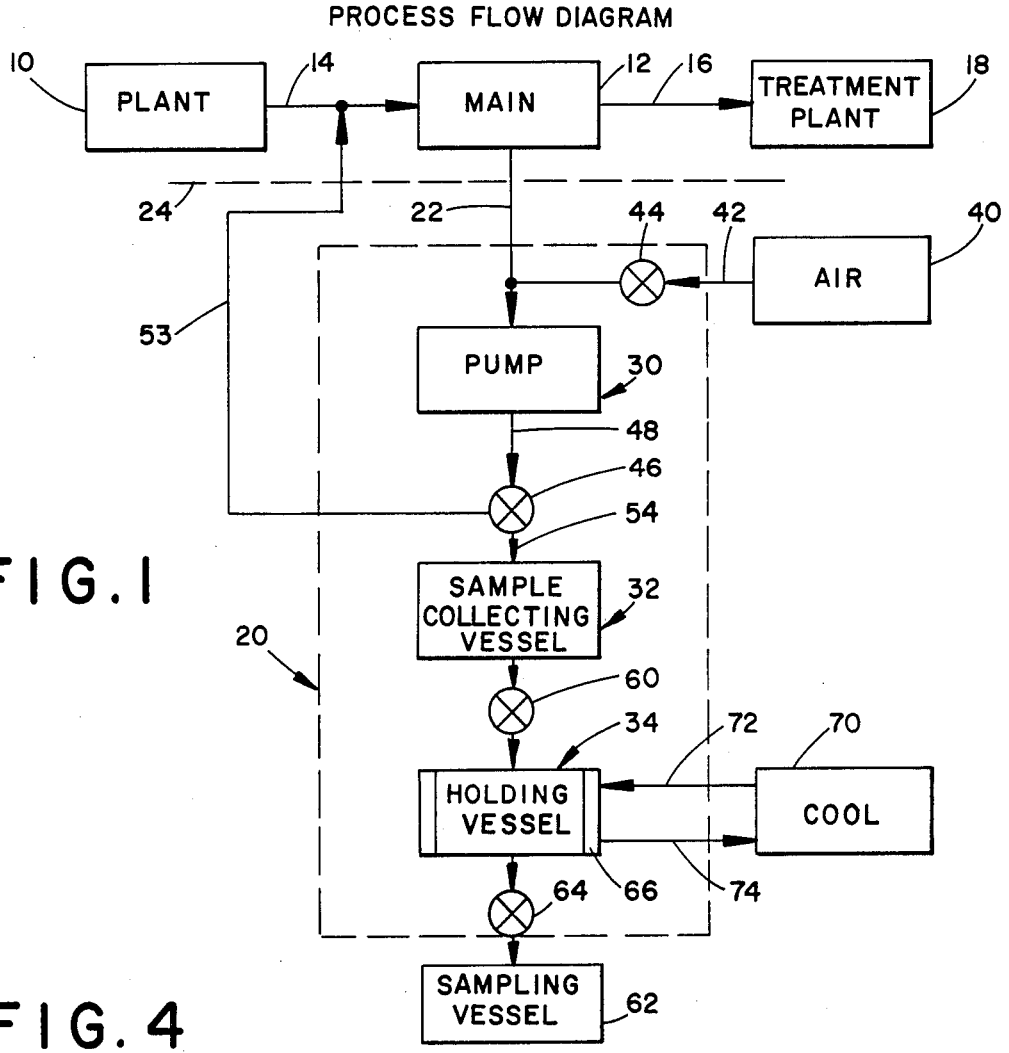
PROCESS FLOW DIAGRAM
PLANT
MAIN
TREATMENT PLANT
AIR
PUMP
SAMPLE COLLECTING VESSEL
HOLDING VESSEL
COOL
SAMPLING VESSEL
10
14
12
16
18
24
22
44
42
40
53
30
48
46
54
32
20
60
34
72
70
66
74
64
62

FIG. 1

FIG. 4

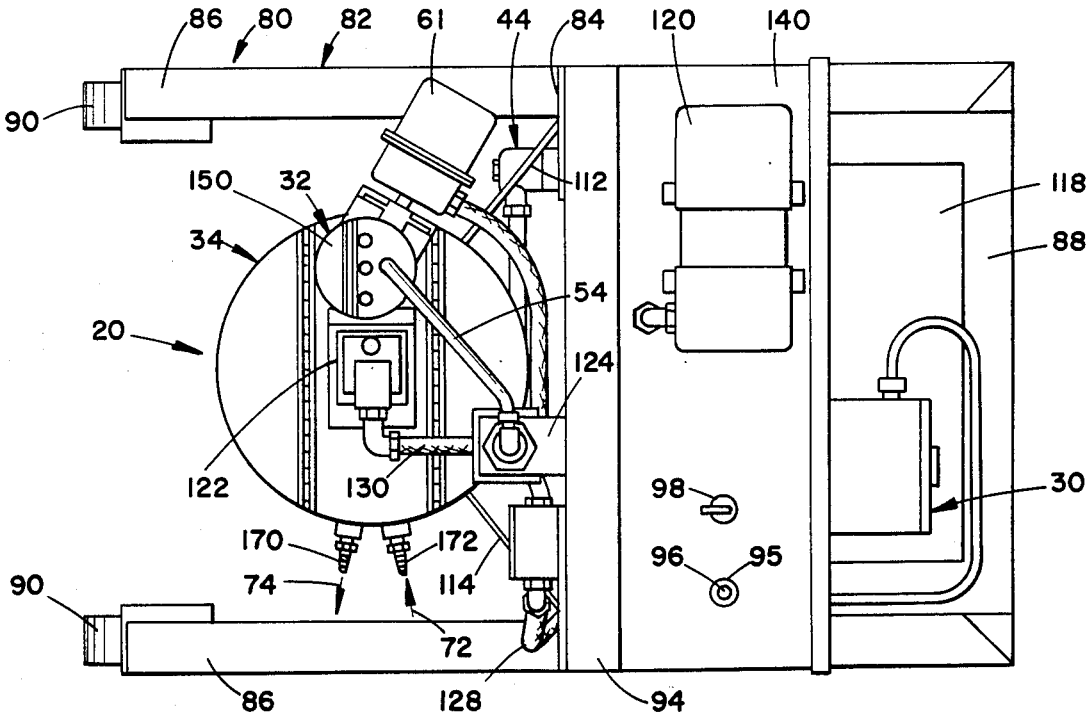
86
80
82
61
44
84
120
140
90
150
32
112
118
34
88
54
20
124
122
130
98
30
170
172
96
95
74
114
72
128
94