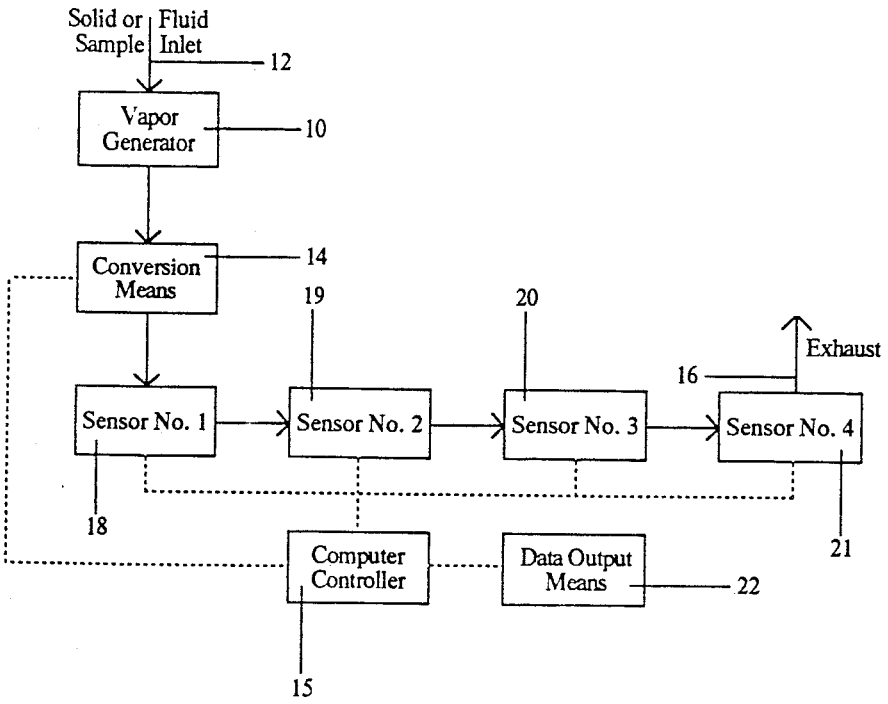
Solid or Sample
Fluid Inlet
12
Vapor Generator
10
Conversion Means
14
19
20
Exhaust
16
Sensor No. 1
Sensor No. 2
Sensor No. 3
Sensor No. 4
18
21
Computer Controller
Data Output Means
22
15

Fig. 1