United States Patent [19]

Stetter

[11] **Patent Number: 4,818,348**

[45] **Date of Patent: Apr. 4, 1989**

[54] **METHOD AND APPARATUS FOR IDENTIFYING AND QUANTIFYING SIMPLE AND COMPLEX CHEMICALS**

[75] Inventor: **Joseph R. Stetter**, Naperville, Ill.

[73] Assignee: **Transducer Research, Inc.**, Naperville, Ill.

[21] Appl. No.: **53,723**

[22] Filed: **May 26, 1987**

[51] **Int. Cl.**[4] **G01N 31/00**

[52] **U.S. Cl.** ..... **204/1 T**; 73/23; 204/406; 204/411; 204/412; 364/497; 422/98; 436/52; 436/149; 436/150

[58] **Field of Search** ..... 364/497; 204/406, 411, 204/412, 1 T; 422/98; 436/52, 149, 150; 338/34; 73/23; 324/439

[56] **References Cited**

U.S. PATENT DOCUMENTS

2,149,441	1/1936	Jacobson	23/232
2,857,251	10/1958	Krogh	23/232
3,200,011	8/1965	Baker	117/217
3,540,851	11/1970	Vree et al.	23/232
3,695,848	10/1972	Taguchi	23/254 E
3,713,773	1/1973	Fontijn et al.	23/232 R
3,791,936	2/1974	Pebler et al.	204/1 T
3,830,630	8/1974	Kiefer et al.	23/232 E
3,961,248	6/1976	Kawamura	324/71
3,977,836	8/1976	Matsuda et al.	23/232 R
3,997,297	12/1976	Jenkins et al.	23/232 E
4,092,232	5/1978	Zetter	204/195 P
4,140,106	2/1979	Kirmaier	128/2 C
4,164,862	8/1979	Jackson	73/27
4,169,708	10/1979	Muggli	23/232
4,170,455	10/1979	Henrie	23/232
4,203,726	5/1980	Patterson	23/232
4,225,410	9/1980	Pace	204/195
4,266,196	5/1981	Kawazoe et al.	324/464
4,305,724	12/1981	Micko	23/232
4,315,753	2/1982	Bruckenstein et al.	23/232 E
4,358,949	11/1982	MacFarland et al.	73/23
4,363,635	12/1982	Hutson	436/132
4,368,431	1/1983	Rohr et al.	324/464
4,399,684	8/1983	Advani et al.	73/1 G
4,432,224	2/1984	Typpo	73/23
4,443,791	4/1984	Risgin et al.	340/634
4,443,793	4/1984	Hall, Jr.	340/634
4,457,161	7/1984	Iwanaga et al.	73/23
4,485,666	12/1984	Higgins et al.	73/23
4,542,640	9/1985	Clifford	73/23
4,596,697	6/1986	Ballato	422/98
4,638,443	1/1987	Kaneyasu et al.	364/497
4,654,127	3/1987	Baker et al.	204/1 T

FOREIGN PATENT DOCUMENTS

915458	11/1972	Canada	73/69
885871	11/1981	U.S.S.R. .	
1474080	5/1977	United Kingdom .	
2017315	10/1979	United Kingdom .	
2047898	12/1980	United Kingdom .	
2099588	12/1981	United Kingdom .	
2098741	12/1982	United Kingdom .	

Primary Examiner—G. L. Kaplan
Attorney, Agent, or Firm—Larson & Taylor

[57] **ABSTRACT**

A portable instrument for use in the field in detecting, identifying, quantifying, and monitoring gas, liquid or solid materials is disclosed. The instrument may analyze either liquids or gases depending upon the type of sensor array therein. The instrument also includes means for changing a gas, liquid or solid to a fluid material. The instrument further includes an array or small sensors which, upon exposure to the unknown material, form a pattern of electrical responses, a source of previously formed response patterns characteristic of various materials, and microprocessor means for comparing the sensor-formed response pattern with one or more previously-formed response patterns to thereby identify the material on a display. The number of responses may be increased by changing the operating voltage, temperature or other condition associated with one or more sensors to provide a plurality of responses from each of one or more of the sensors. The instrument is capable of identifying a large number of liquid and solid materials.
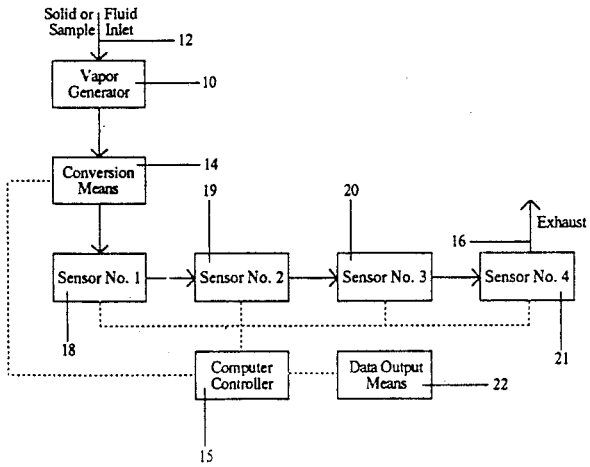
13 Claims, 8 Drawing Sheets