US007314448B2

(12) **United States Patent**
Barbato et al.

(10) **Patent No.: US 7,314,448 B2**
(45) **Date of Patent: *Jan. 1, 2008**

(54) **IMAGING TRANSDUCER ASSEMBLY**

(75) Inventors: **Louis J. Barbato**, Franklin, MA (US); **Isaac Ostrovsky**, Wellesley, MA (US); **Paul Goll**, Danville, CA (US); **Thomas C. Moore**, Livermore, CA (US); **Douglas M. Petty**, Pleasanton, CA (US); **Mark Hamm**, Lynnfield, MA (US); **Richard Romley**, Tracy, CA (US)

(73) Assignee: **SciMed Life Systems, Inc.**, Maple Grove, MN (US)

(*) Notice: Subject to any disclaimer, the term of this patent is extended or adjusted under 35 U.S.C. 154(b) by 265 days.

This patent is subject to a terminal disclaimer.

(21) Appl. No.: **10/754,292**

(22) Filed: **Jan. 9, 2004**

(65) **Prior Publication Data**

US 2004/0193057 A1 Sep. 30, 2004

Related U.S. Application Data

(63) Continuation-in-part of application No. 10/401,901, filed on Mar. 28, 2003, now Pat. No. 7,081,094.

(51) **Int. Cl.**
A61B 8/12 (2006.01)

(52) **U.S. Cl.** **600/466**; 128/899

(58) **Field of Classification Search** 600/459–471, 600/437; 128/899

See application file for complete search history.

(56) **References Cited**

U.S. PATENT DOCUMENTS

4,154,246 A * 5/1979 LeVeen 607/99
4,951,677 A * 8/1990 Crowley et al. 600/463
5,002,058 A 3/1991 Martinelli
5,054,492 A * 10/1991 Scribner et al. 600/463
5,115,814 A * 5/1992 Griffith et al. 600/463
5,176,140 A * 1/1993 Kami et al. 600/459
5,207,225 A 5/1993 Oaks et al.
5,228,176 A 7/1993 Bui et al.
5,243,988 A * 9/1993 Sieben et al. 600/463
5,259,837 A 11/1993 Van Wormer
5,351,693 A 10/1994 Taimisto et al.
5,353,798 A 10/1994 Sieben
5,368,035 A 11/1994 Hamm et al.
5,368,036 A 11/1994 Tanaka et al.
5,372,138 A * 12/1994 Crowley et al. 600/463
5,437,282 A * 8/1995 Koger et al. 600/463
5,488,954 A * 2/1996 Sleva et al. 600/459

(Continued)

FOREIGN PATENT DOCUMENTS

WO WO92/03095 3/1992

Primary Examiner—Francis J. Jaworski
(74) *Attorney, Agent, or Firm*—Orrick Herrington & Sutcliffe LLP

(57) **ABSTRACT**

An improved medical imaging device assembly includes an imaging transducer coupled to the distal end of a drive shaft, and a conductive wire is wrapped around a distal portion of the drive shaft, wherein the conductive wire reinforces the imaging device assembly. In one embodiment, the conductive wire is part of a sensor adapted to communicate with a medical positioning system. In another embodiment, the conductive wire is configured to be a matching circuit for the imaging transducer. The conductive wire may be configured to be in parallel with the imaging transducer or configured to be in series with the imaging transducer.
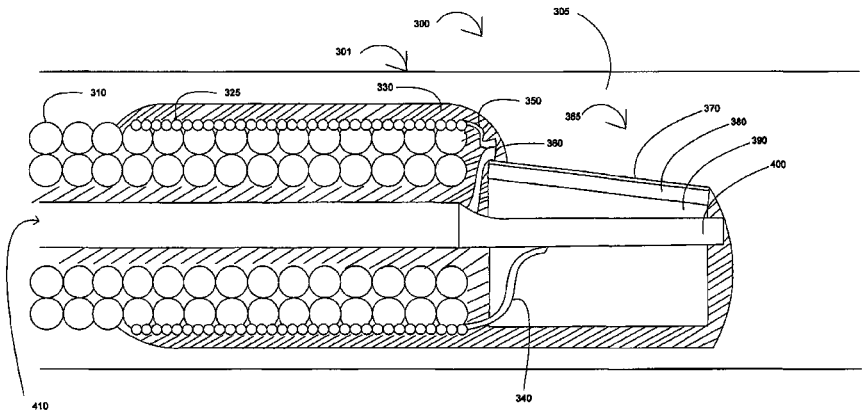
26 Claims, 6 Drawing Sheets