# United States Patent [19]

**Rogers**

[11] **Patent Number: 4,514,048**

[45] **Date of Patent: Apr. 30, 1985**


[54] **VARIABLE FOCUS ELASTOMERIC LENS SYSTEM**


[75] Inventor: **Howard G. Rogers,** Weston, Mass.

[73] Assignee: **Polaroid Corporation,** Cambridge, Mass.



[21] Appl. No.: **293,230**

[22] Filed: **Aug. 17, 1981**

[51] **Int. Cl.**[3] ..... **G02B 3/10;** G02B 15/00; G02C 7/08

[52] **U.S. Cl.** ..... **350/423;** 350/437; 351/168

[58] **Field of Search** ..... 350/418, 437, 423; 351/168, 95, 169



[56] **References Cited**

U.S. PATENT DOCUMENTS

| | | | |
|---|---|---|---|
| 60,109 | 11/1866 | Woodward | 350/418 |
| 504,890 | 9/1893 | Ohmart | 350/418 |
| 708,365 | 9/1902 | Kliegl et al. | 350/418 |
| 1,269,422 | 6/1918 | Gordon | 350/418 |
| 1,955,690 | 4/1934 | Spill | 351/95 X |
| 2,165,078 | 7/1939 | Toulon | 350/418 |
| 2,269,905 | 1/1942 | Graham | 350/418 |
| 2,300,251 | 10/1942 | Flint | 350/418 |
| 3,161,718 | 12/1964 | DeLuca | 350/418 |

OTHER PUBLICATIONS

Caudell et al., "Active Optics with RTV Silicone Rubber", *SPIE,* vol. 115, Advances in Replicated & Plastic Optics, pp. 18–24.



*Primary Examiner*—John K. Corbin
*Assistant Examiner*—Scott J. Sugarman
*Attorney, Agent, or Firm*—Francis J. Caufield



[57] **ABSTRACT**

A variable focus lens system comprising an elastomeric lens structured to undergo shape changes and corresponding focal length changes in a continuous manner over a predetermined range in response to variations in a tensile stress uniformly distributed around the peripheral edges of the lens element. The lens element is preferably structured of silicon rubber materials which are molded around an extensible and contractable annular coil spring arrangement which is utilized to apply the required variable tensile stress.

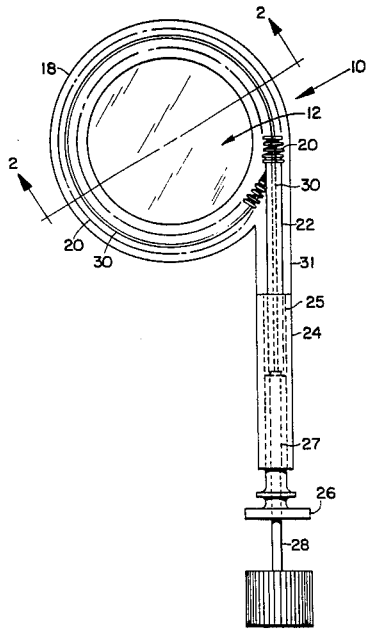
**11 Claims, 4 Drawing Figures**