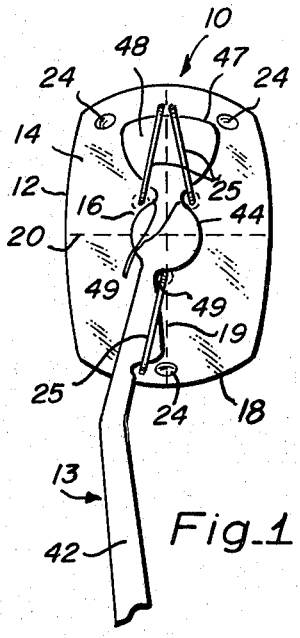

Fig_1

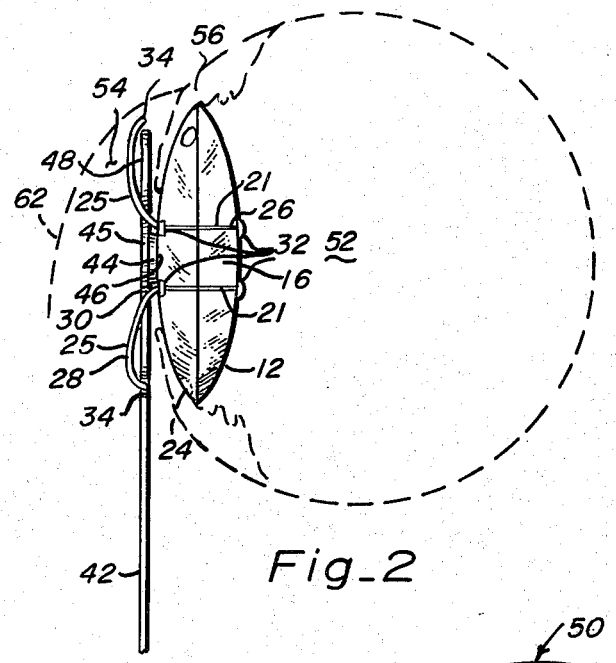

Fig_2

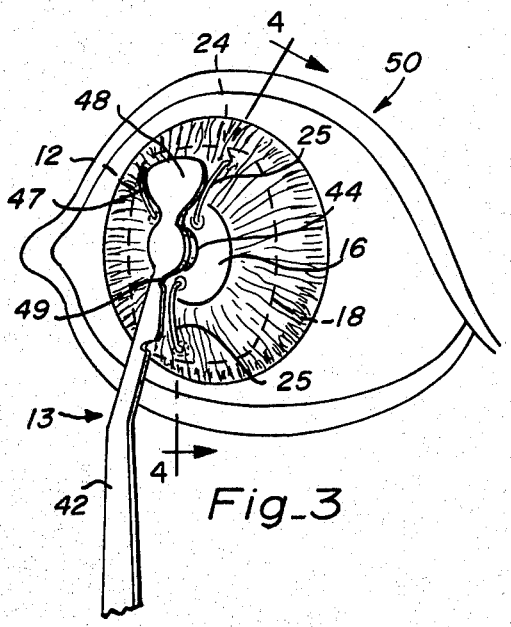

Fig_3

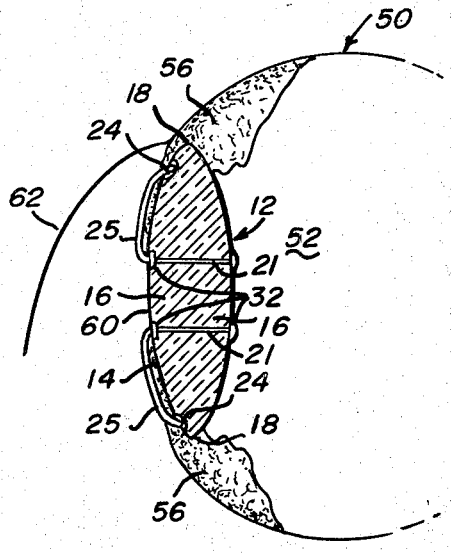

Fig_4

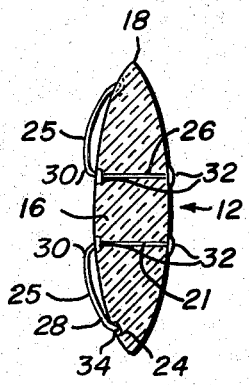

Fig_5