US009410048B2

(12) **United States Patent**
Katou

(10) **Patent No.: US 9,410,048 B2**
(45) **Date of Patent: Aug. 9, 2016**

(54) **ANTIFOULING FILM, AIR BLOWER BLADE PROVIDED WITH SAME, AIR BLOWER, AND ANTIFOULING COATING MATERIAL**

(75) Inventor: **Ryou Katou**, Aichi (JP)

(73) Assignee: **PANASONIC INTELLECTUAL PROPERTY MANAGEMENT CO., LTD.**, Osaka (JP)

(*) Notice: Subject to any disclaimer, the term of this patent is extended or adjusted under 35 U.S.C. 154(b) by 662 days.

(21) Appl. No.: **13/979,442**

(22) PCT Filed: **Mar. 5, 2012**

(86) PCT No.: **PCT/JP2012/001492**

§ 371 (c)(1),
(2), (4) Date: **Jul. 12, 2013**

(87) PCT Pub. No.: **WO2012/144121**

PCT Pub. Date: **Oct. 26, 2012**

(65) **Prior Publication Data**

US 2013/0294926 A1 Nov. 7, 2013

(30) **Foreign Application Priority Data**

Apr. 22, 2011 (JP) 2011-095773

(51) **Int. Cl.**

C09D 5/16	(2006.01)
C09D 123/26	(2006.01)
F04D 29/28	(2006.01)
C09D 5/24	(2006.01)
C09D 7/12	(2006.01)
C09D 127/18	(2006.01)
F01D 5/28	(2006.01)
C09C 1/56	(2006.01)

(52) **U.S. Cl.**

CPC ***C09D 5/1687*** (2013.01); ***C09C 1/56*** (2013.01); ***C09D 5/1618*** (2013.01); ***C09D 5/1662*** (2013.01); ***C09D 5/24*** (2013.01); ***C09D 7/1266*** (2013.01); ***C09D 123/26*** (2013.01); ***C09D 127/18*** (2013.01); ***F01D 5/288*** (2013.01); ***F04D 29/281*** (2013.01); *F05C 2253/12* (2013.01); *Y10T 428/3154* (2015.04)

(58) **Field of Classification Search**

CPC .. C09D 5/1687; C09D 5/1618; C09D 7/1266; C09D 5/1662; C09D 5/24; C09D 127/18; C09D 123/26; C09C 1/56; Y10T 428/3154; F01D 5/288; F01D 5/286; F01D 25/007; F05D 2230/90; F04D 29/281; F05C 2253/12; C08K 3/04; C08L 23/26; C08L 71/02

USPC ..... 416/241 A; 106/1.05, 18.35; 424/409, 424/78.18; 428/421; 524/401, 546, 408, 524/409, 410

See application file for complete search history.

(56) **References Cited**

U.S. PATENT DOCUMENTS

5,034,460	A	7/1991	Nishioka
2010/0095697	A1	4/2010	Morioka

FOREIGN PATENT DOCUMENTS

EP	2 223 962	A1	9/2010
JP	4722456	B1	6/1972

(Continued)

OTHER PUBLICATIONS

International Search Report for PCT/JP2012/001492 dated May 22, 2012.

Japanese Office Action for Application No. JP 2013-510851 dated Jan. 5, 2016.

Primary Examiner — Igor Kershteyn
Assistant Examiner — Aaron R Eastman
(74) *Attorney, Agent, or Firm* — Pearne & Gordon LLP

(57) **ABSTRACT**

An antifouling film is coated on a base, and contains a binder component, conductive particles, and a fluororesin. The conductive particles are bound together by the binder component; the binder component is closely bound to the base; and the antifouling film has a comprising the conductive particles of which surfaces are covered with the fluororesin.
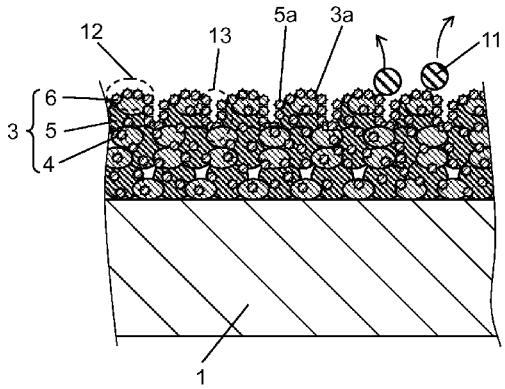
9 Claims, 5 Drawing Sheets