US005209748A

United States Patent [19]

Daikuzono

[11] Patent Number: 5,209,748

[45] Date of Patent: May 11, 1993

[54] LASER LIGHT IRRADIATION APPARATUS

[75] Inventor: Norio Daikuzono, Chiba, Japan

[73] Assignee: S.L.T. Japan Co., Ltd., Tokyo, Japan

[21] Appl. No.: 899,043

[22] Filed: Jun. 16, 1992

Related U.S. Application Data

[63] Continuation of Ser. No. 568,124, Aug. 16, 1990, abandoned.

[30] **Foreign Application Priority Data**

Aug. 24, 1989 [JP] Japan 1-217869

[51] Int. Cl.[5] A61B 17/36

[52] U.S. Cl. 606/16; 606/7; 606/15; 606/17

[58] Field of Search 606/2, 7, 10–17; 128/395, 396, 397, 398

[56] **References Cited**

U.S. PATENT DOCUMENTS

4,126,136	11/1978	Auth et al. .	
4,233,493	11/1980	Nath .	
4,322,164	3/1982	Shaw et al.	356/243
4,648,892	3/1987	Kittrell et al. .	
4,649,151	3/1987	Dougherty et al. .	
4,660,925	4/1987	McCaughan, Jr.	350/96.15
4,669,467	6/1987	Willett et al. .	
4,693,556	9/1987	McCaughan, Jr.	350/320
4,736,743	4/1988	Daikuzono .	
4,773,579	9/1988	Unuma .	
4,799,479	1/1989	Spears .	
4,832,979	5/1989	Hoshino .	
4,848,339	7/1989	Rink et al. .	
4,850,351	7/1989	Herman et al. .	
4,860,743	8/1989	Abela .	
4,862,886	9/1989	Clarke et al.	606/7
4,866,168	9/1989	Dougherty et al. .	
4,994,060	2/1991	Rink et al.	606/28
5,054,867	10/1991	Wagnieres et al.	385/31
5,059,191	10/1991	Beyer et al.	606/2

FOREIGN PATENT DOCUMENTS

214712	3/1987	European Pat. Off. .
61-181455	8/1986	Japan .
62-34553	2/1987	Japan .
63-216579	9/1988	Japan .
2-34161	2/1990	Japan .
2-39003	2/1990	Japan .
2-98373	4/1990	Japan .
1-135370	5/1992	Japan .
2185188	12/1986	United Kingdom .

OTHER PUBLICATIONS

"Photodynamic Therapy of Early Cancer . . . " Wagnieres et al., SPIE Institute Series, Jun. 1990.

Nobori et al., "The Application of YAG Laser to Hyperthermia," *Bulletin of the Japan Society of Laser Medicine,* vol. 6, No. 3, Jan. 1986, pp. 71–76.

Suzuki et al., "Endoscopic Local Hyperthermia with Nd-YAG Laser-Experimental Study and Development of Computed Thermo-System," *Bulletin of the Japan Society of Laser Medicine,* vol. 6, No. 3, Jan. 1986, pp. 347–350.

Mashiko et al., "Basic Study on Photochemical Effect of Pheophorbide as Irradiated by Nd:YAG Laser Light," *Bulletin of the Japan Society of Laser Medicine,* vol. 6, No. 3, Jan. 1986. pp. 113–116.

Dougherty et al., "Photoradiation Therapy for the Treatment of Malignant Tumors," *Cancer Research,* vol. 38, (Aug. 1978), pp. 2628–2635.

Primary Examiner—Peter A. Aschenbrenner

Attorney, Agent, or Firm—Lowe, Price, LeBlanc & Becker

[57] **ABSTRACT**

A laser light irradiation apparatus used for medical treatment of tissues. According to a preferred embodiment, the apparatus comprises a probe, an optical fiber feeding laser light into the probe and a lead wire for detecting a temperature being inserted through and projecting from the probe. Then, the probe contains laser light scattering particles for uniform irradiation of the laser light against the tissues. Further, the probe is fabricated from a laser light tramissive synthetic material, and the fore end of a core of the optical fiber and the inserting part of the lead wire are in the synthetic material of the probe for easy molding for this apparatus.
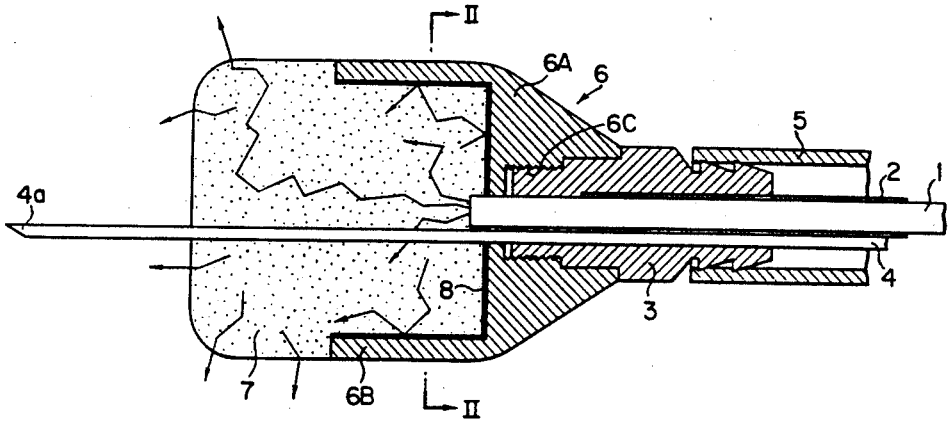
13 Claims, 4 Drawing Sheets