US009409648B2

(12) **United States Patent**
Eakins

(10) **Patent No.: US 9,409,648 B2**
(45) **Date of Patent: Aug. 9, 2016**

(54) **SEATING ARRANGEMENT AND METHOD**

(71) Applicant: **The Boeing Company**, Chicago, IL (US)

(72) Inventor: **Mark E. Eakins**, Kirkland, WA (US)

(73) Assignee: **The Boeing Company**, Chicago, IL (US)

(*) Notice: Subject to any disclaimer, the term of this patent is extended or adjusted under 35 U.S.C. 154(b) by 84 days.

(21) Appl. No.: **14/278,907**

(22) Filed: **May 15, 2014**

(65) **Prior Publication Data**

US 2015/0329208 A1 Nov. 19, 2015

(51) **Int. Cl.**

B64D 11/06	(2006.01)
B64F 5/00	(2006.01)
G06F 17/50	(2006.01)

(52) **U.S. Cl.**

CPC ***B64D 11/06*** (2013.01); ***B64D 11/0601*** (2014.12); ***B64D 11/0641*** (2014.12); ***B64D 11/0643*** (2014.12); ***B64F 5/00*** (2013.01); ***G06F 17/5095*** (2013.01)

(58) **Field of Classification Search**

None

See application file for complete search history.

(56) **References Cited**

U.S. PATENT DOCUMENTS

2,608,366	A	*	8/1952	Jergenson	B60N 2/34 105/315
2,859,803	A	*	11/1958	McCallister	B64D 1/00 244/122 R
4,936,620	A	*	6/1990	Francois	B64D 11/00 105/345
5,083,838	A	*	1/1992	Maxwell, Jr.	A47C 1/12 297/232
5,716,026	A	*	2/1998	Pascasio	B64D 11/00 105/315
5,740,989	A	*	4/1998	Daines	B64D 11/00 244/118.6
5,947,541	A	*	9/1999	Behrens	B60N 2/01 296/63
D421,948	S	*	3/2000	Dryburgh	D12/195
6,059,364	A	*	5/2000	Dryburgh	A47C 1/0352 105/322

(Continued)

FOREIGN PATENT DOCUMENTS

EP	2289798	3/2011
EP	2907754 A1	8/2015

(Continued)

OTHER PUBLICATIONS

European Search Report dated Oct. 9, 2015 for EP15167762.

Primary Examiner — Medhat Badawi

(57) **ABSTRACT**

A seating arrangement for an aircraft may include a plurality of seats that may be convertible into a flat bed configuration. Each seat may have a seat centerline that may be oriented at a seat angle relative to a longitudinal axis of an aircraft cabin. Each seat may include a footrest that may be offset from the seat centerline of the seat.
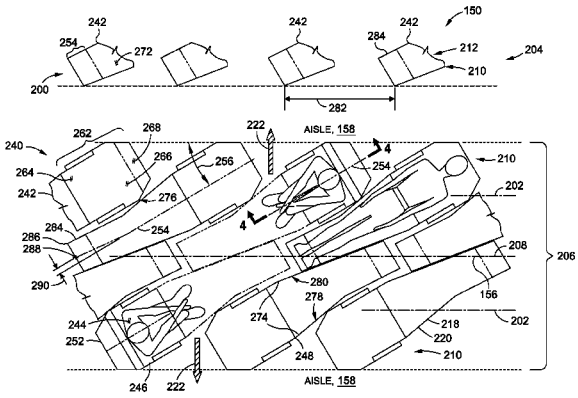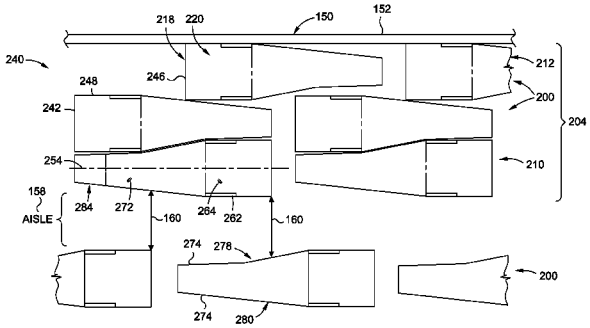
9 Claims, 20 Drawing Sheets