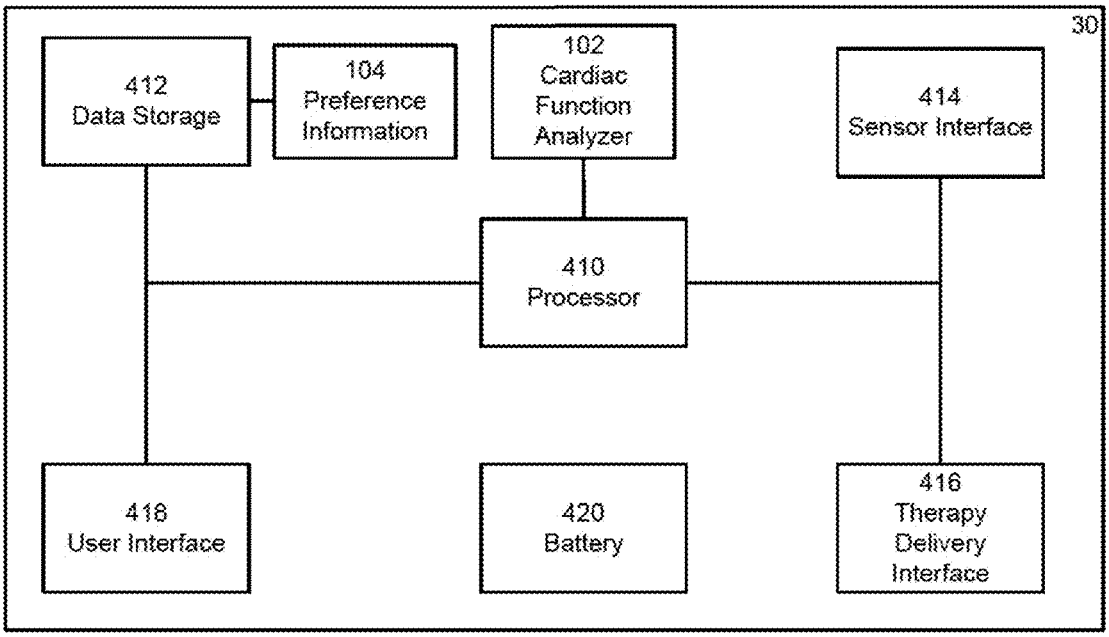
30
412
Data Storage
104
Preference
Information
102
Cardiac
Function
Analyzer
414
Sensor Interface
410
Processor
418
User Interface
420
Battery
416
Therapy
Delivery
Interface

FIG. 1