US009408348B2

(12) **United States Patent**
Walker et al.

(10) **Patent No.: US 9,408,348 B2**
(45) **Date of Patent: Aug. 9, 2016**

(54) **ADJUSTABLE ROW UNIT DECK PLATE FOR A HEADER OF AN AGRICULTURAL HARVESTER**

(71) Applicant: **CNH America LLC**, New Holland, PA (US)

(72) Inventors: **Eric L. Walker**, Leola, PA (US); **Jason Earl Smith**, State Center, IA (US); **Michael Lee Berggren**, Stockton, IA (US)

(73) Assignee: **CNH Industrial America LLC**, New Holland, PA (US)

(*) Notice: Subject to any disclaimer, the term of this patent is extended or adjusted under 35 U.S.C. 154(b) by 0 days.

(21) Appl. No.: **14/163,176**

(22) Filed: **Jan. 24, 2014**

(65) **Prior Publication Data**

US 2015/0208580 A1 Jul. 30, 2015

(51) **Int. Cl.**
A01D 45/02 (2006.01)

(52) **U.S. Cl.**
CPC ***A01D 45/028*** (2013.01); ***A01D 45/021*** (2013.01); ***A01D 45/025*** (2013.01)

(58) **Field of Classification Search**
CPC .. A01D 45/021; A01D 45/025; A01D 43/082
USPC 56/119, 62, 107
See application file for complete search history.

(56) **References Cited**

U.S. PATENT DOCUMENTS

2,604,749 A * 7/1952 Fergason 56/103
2,618,113 A * 11/1952 Hyman 56/104
3,101,579 A * 8/1963 Karlsson et al. 56/105
3,126,690 A * 3/1964 Becker 56/107
3,262,255 A 7/1966 Karlsson et al.
3,271,940 A * 9/1966 Ashton et al. 56/105
3,552,398 A * 1/1971 Looker et al. 460/130
3,707,833 A 1/1973 Sutton
3,831,356 A * 8/1974 Maiste et al. 56/10.3
3,858,384 A * 1/1975 Maiste et al. 56/14.2
3,940,913 A * 3/1976 Wallenfang et al. 56/98
4,238,916 A * 12/1980 Kesl et al. 56/106
RE31,064 E * 10/1982 Shriver 56/98
4,621,968 A 11/1986 Hutchison
5,060,464 A * 10/1991 Caron 56/62
5,680,750 A * 10/1997 Stefl 56/62
5,878,559 A * 3/1999 Cooksey et al. 56/62
6,226,969 B1 * 5/2001 Becker 56/62
6,237,312 B1 * 5/2001 Becker 56/62
6,625,969 B2 9/2003 Glazik
7,073,316 B2 7/2006 Resing et al.
7,373,767 B2 5/2008 Calmer
8,171,708 B2 5/2012 Calmer
8,196,380 B2 6/2012 Carboni
8,224,534 B2 * 7/2012 Kowalchuk 701/50
8,267,240 B2 9/2012 Moreland et al.
2004/0016219 A1 1/2004 Calmer
2008/0092507 A1 4/2008 Bollig

(Continued)

Primary Examiner — Árpád Fábián-Kovács
(74) *Attorney, Agent, or Firm* — Patrick M. Sheldrake

(57) **ABSTRACT**

An adjustable row unit for a header of a combine harvester is disclosed. The row unit includes opposed and cooperating curved deck plates that reduce the distance from the upper surfaces of the deck plates to the stripping roll pinch points. The deck plates move in unison and the opening of the stalk receiving gap is variable and subject to coarse and fine adjustment. Coarse adjustment is achieved by moving the deck plates into a selected stalk receiving position and fine adjustment is performed by a yieldable biasing member when the deck plates are in the selected stalk receiving position.
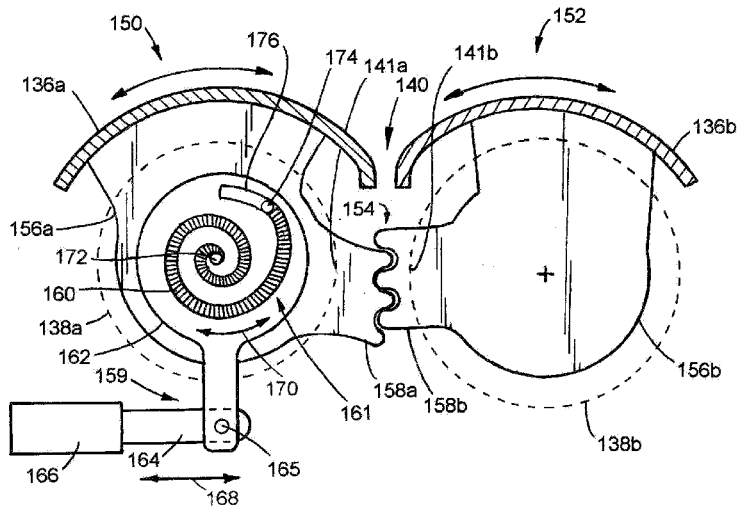
8 Claims, 5 Drawing Sheets