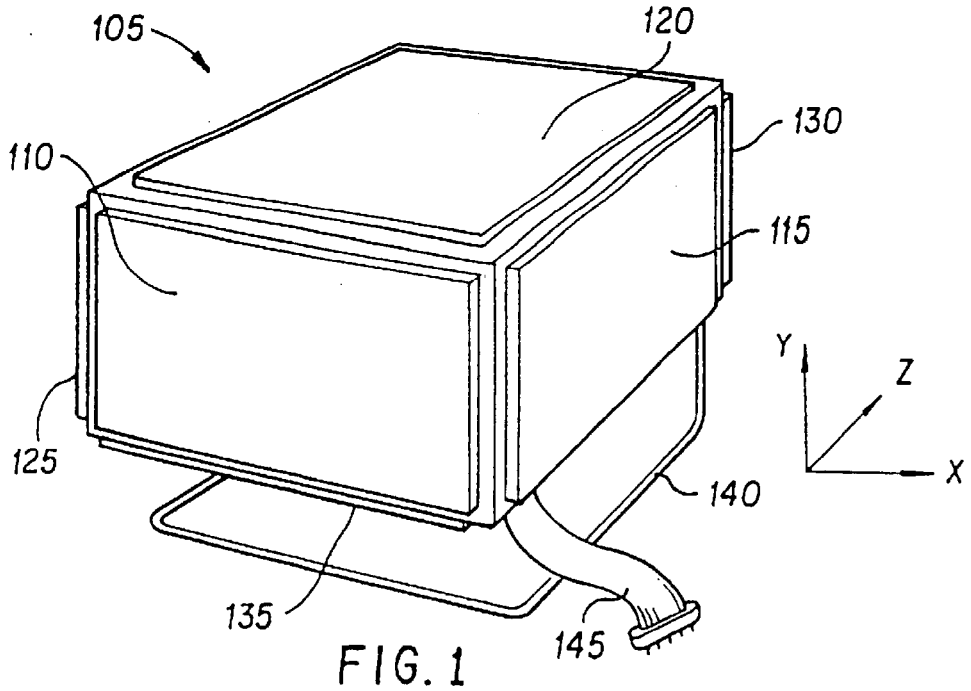
105
120
130
110
115
Y
Z
X
125
140
135
145

FIG. 1

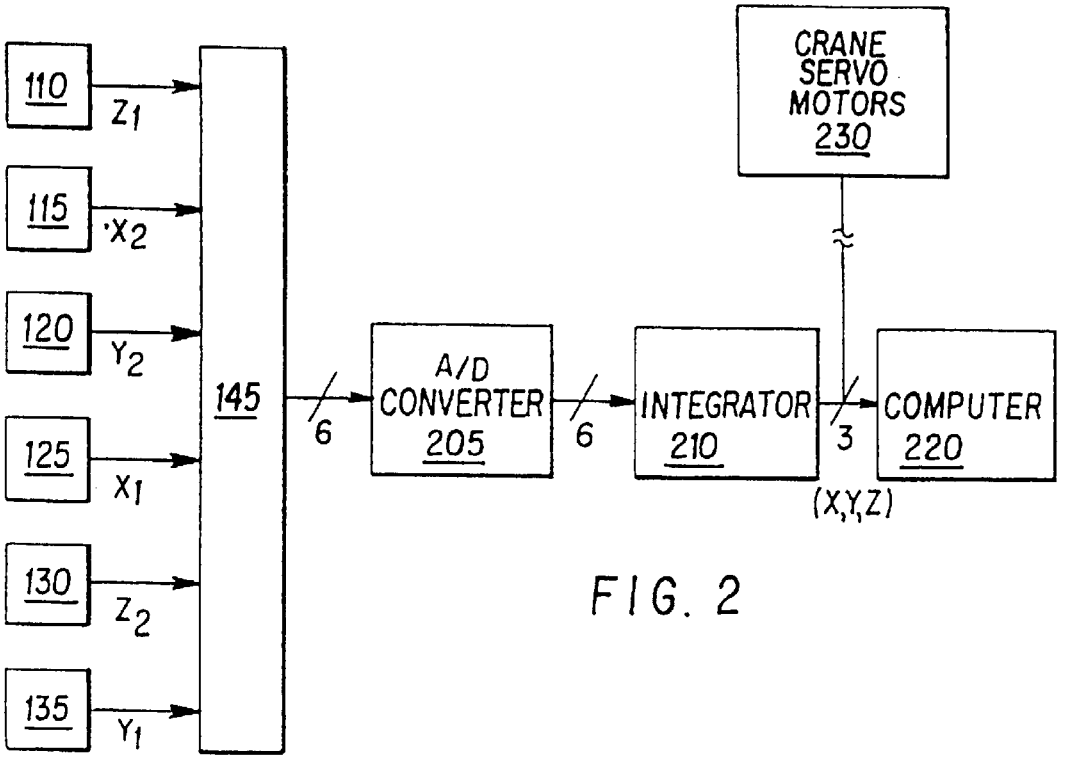
110
Z1
115
X2
120
Y2
125
X1
130
Z2
135
Y1
145
6
A/D CONVERTER 205
6
INTEGRATOR 210
3
(X,Y,Z)
COMPUTER 220
CRANE SERVO MOTORS 230

FIG. 2