US009989147B2

(12) **United States Patent**
Sujan

(10) **Patent No.: US 9,989,147 B2**
(45) **Date of Patent: Jun. 5, 2018**

(54) **SYSTEM AND METHODS OF ADJUSTING A TRANSMISSION SHIFT SCHEDULE**

(71) Applicant: **Cummins, Inc.**, Columbus, IN (US)

(72) Inventor: **Vivek A. Sujan**, Columbus, IN (US)

(73) Assignee: **Cummins, Inc.**, Columbus, IN (US)

(*) Notice: Subject to any disclaimer, the term of this patent is extended or adjusted under 35 U.S.C. 154(b) by 360 days.

(21) Appl. No.: **14/725,786**

(22) Filed: **May 29, 2015**

(65) **Prior Publication Data**

US 2015/0345622 A1 Dec. 3, 2015

Related U.S. Application Data

(60) Provisional application No. 62/005,031, filed on May 30, 2014.

(51) **Int. Cl.**

F16H 61/02	(2006.01)
F16H 59/74	(2006.01)
F16H 59/66	(2006.01)
F16H 59/50	(2006.01)

(52) **U.S. Cl.**

CPC ***F16H 61/0213*** (2013.01); ***F16H 59/50*** (2013.01); ***F16H 59/66*** (2013.01); ***F16H 59/74*** (2013.01); *F16H 2059/663* (2013.01); *F16H 2059/666* (2013.01); *F16H 2059/743* (2013.01); *F16H 2061/0234* (2013.01)

(58) **Field of Classification Search**

None

See application file for complete search history.

(56) **References Cited**

U.S. PATENT DOCUMENTS

4,905,544	A	3/1990	Ganoung	
5,070,832	A	12/1991	Hapka et al.	
5,484,350	A *	1/1996	Ishikawa	F16H 61/0213 477/120
5,832,400	A	11/1998	Takahashi et al.	
6,246,941	B1	6/2001	Sayman	
6,311,118	B1 *	10/2001	Ito	B60K 31/047 477/42
6,389,346	B1 *	5/2002	Gianoglio	B60W 10/06 477/78
6,561,145	B1	5/2003	Stockhausen et al.	
7,650,224	B2	1/2010	Andrea et al.	
7,987,034	B2 *	7/2011	Taffin	F16H 61/0213 701/51
8,099,220	B2	1/2012	Kim et al.	
8,145,376	B2	3/2012	Sherony	
8,187,149	B2	5/2012	Koenig	
8,255,152	B2	8/2012	Barth et al.	
8,332,108	B2	12/2012	Kresse et al.	
8,442,732	B1	5/2013	Steeby	

(Continued)

Primary Examiner — Justin Holmes

(74) *Attorney, Agent, or Firm* — Foley & Lardner LLP

(57) **ABSTRACT**

A method for a vehicle includes receiving a shift schedule for a transmission of a vehicle, the shift schedule indicating when shift events occur based on operation of the vehicle. The method further includes receiving vehicle operation data during operation of the vehicle. The method further includes determining a power to overcome vehicle losses based on the vehicle operation data. The method further includes determining an adjustment to the shift schedule to optimize a vehicle operating parameter based on the determined power to overcome vehicle losses and implementing the adjustment to the shift schedule.
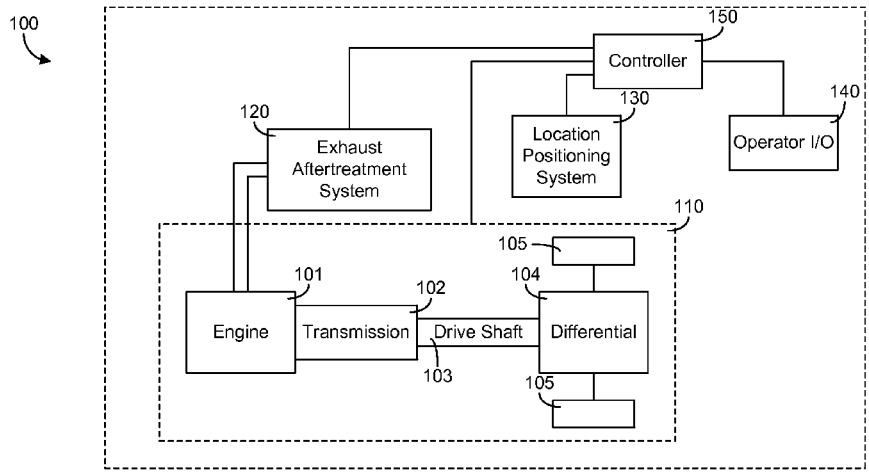
20 Claims, 10 Drawing Sheets