350-432 SR
XR 3,169,247 TX4074C
SEARCH ROOM

Feb. 9, 1965 J. K. DAVIS ETAL 3,169,247
OPHTHALMIC ASPHERIC LENS SERIES
Filed Dec. 9, 1959 6 Sheets-Sheet 1

X2034

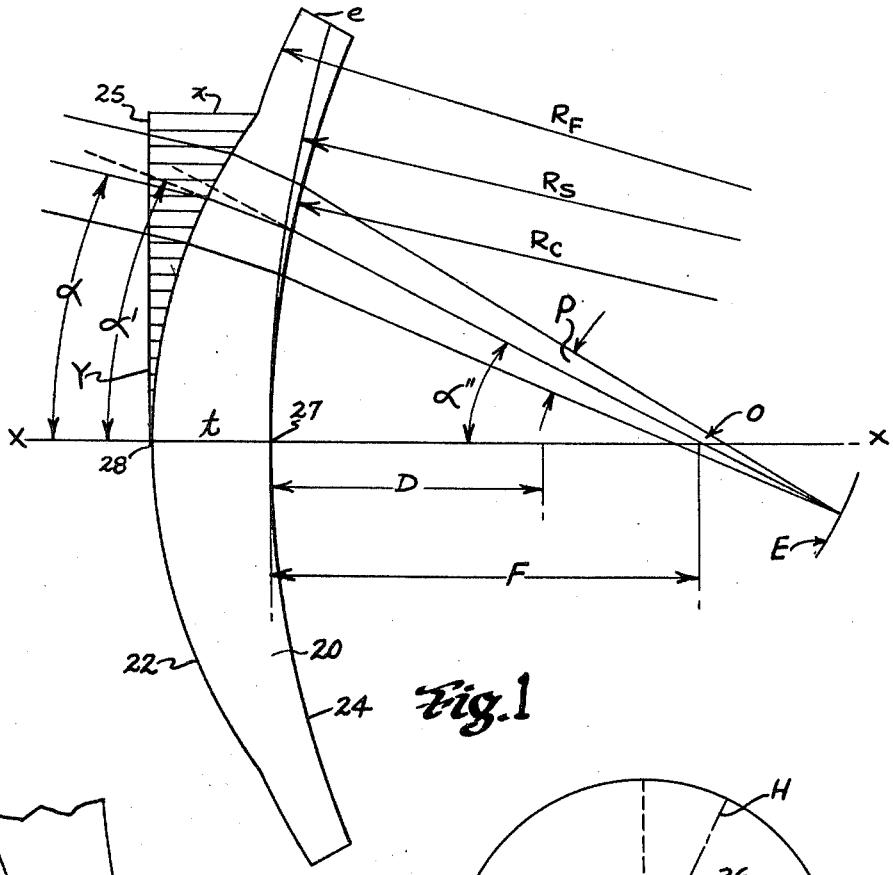


Fig. 1

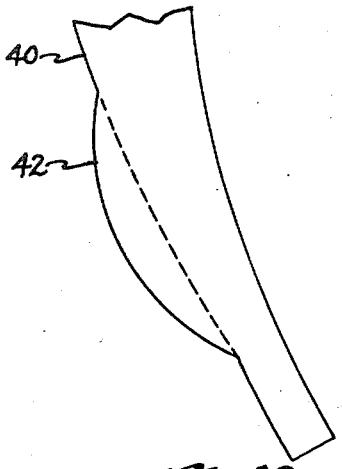


Fig. 10

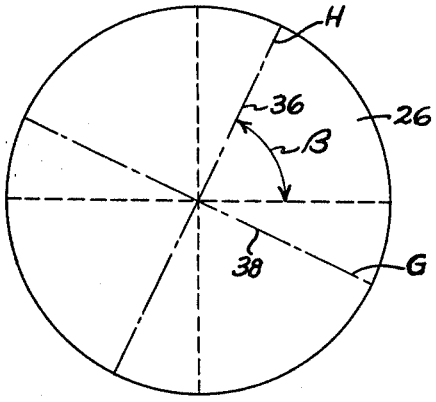


Fig. 8

INVENTORS
JOHN K. DAVIS
HENRY G. FERNALD
BY Louis R. Gagnon
Noble S. Williams
ATTORNEYS

3169247
OR IN 351/167