FIG. 2

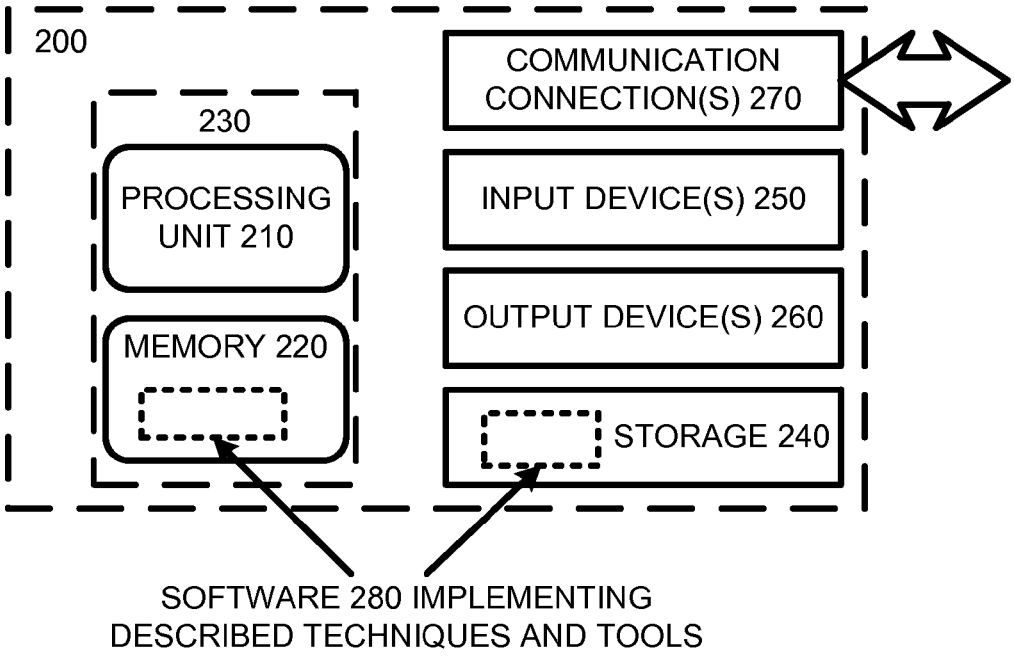
200
230
PROCESSING UNIT 210
MEMORY 220
COMMUNICATION CONNECTION(S) 270
INPUT DEVICE(S) 250
OUTPUT DEVICE(S) 260
STORAGE 240
SOFTWARE 280 IMPLEMENTING DESCRIBED TECHNIQUES AND TOOLS