US005650247A

United States Patent [19]

Taniguchi et al.

[11] Patent Number: 5,650,247

[45] Date of Patent: Jul. 22, 1997

[54] **PREPARATION AND REPRODUCTION OF FILTERS AND PREPARATION OF FILTER PHOTOGRAPHIC MATERIALS**

[75] Inventors: **Yukio Taniguchi**; **Minoru Utsumi**, both of Tokyo, Japan

[73] Assignee: **Dai Nippon Printing Co., Ltd.**, Tokyo, Japan

[21] Appl. No.: **613,684**

[22] PCT Filed: **Mar. 15, 1990**

[86] PCT No.: **PCT/JP90/00339**

§ 371 Date: **Nov. 15, 1990**

§ 102(e) Date: **Nov. 15, 1990**

[87] PCT Pub. No.: **WO90/10881**

PCT Pub. Date: **Sep. 20, 1990**

[30] **Foreign Application Priority Data**

Mar. 16, 1989	[JP]	Japan	1-64259
Mar. 16, 1989	[JP]	Japan	1-64260
Mar. 18, 1989	[JP]	Japan	1-67250

[51] **Int. Cl.**[6] **G03H 1/30**; G03H 1/20; G03H 1/04

[52] **U.S. Cl.** **430/1**; 430/4; 430/2; 430/7; 359/12; 359/22

[58] **Field of Search** 430/1, 2, 4, 7; 359/1, 3, 12, 22, 568; 355/32, 38

[56] **References Cited**

U.S. PATENT DOCUMENTS

T861,026	4/1969	Harper et al.	351/1
3,506,327	4/1970	Leith et al.	430/1
3,567,305	3/1971	Collier et al.	359/11
3,633,989	1/1972	Benton	359/31
3,647,289	3/1972	Weber	359/12
3,758,186	9/1973	Brumm	359/12
3,776,727	12/1973	Nassenstein et al.	430/1
4,071,291	1/1978	Suzuki et al.	359/24
4,171,766	10/1979	Ruell	359/2

(List continued on next page.)

FOREIGN PATENT DOCUMENTS

47-26753	10/1972	Japan .
53-36335	10/1978	Japan .
56-4108	1/1981	Japan .
57-8213	7/1982	Japan .
63-4731	3/1988	Japan .

OTHER PUBLICATIONS

Benv & Wolf "Principles of Optics" 1970 p. 280 Fourth Ed. Pergaman Press.

Primary Examiner—Martin Angebranndt
Attorney, Agent, or Firm—Armstrong, Westerman Hattori, McLeland & Naughton

[57] **ABSTRACT**

The preparation of a filter comprises illuminating a photographic material and a mask located at a given distance therefrom with light from the opposite directions to make a hologram and then reproducing an reproduced image of said hologram in the photographic material, thus making it possible to prepare a precise color filter with no need of any close contact of the mask with the photographic material and without causing the mask image to shade off. According to the reproduction of a hologram applicable as a color filter, a master hologram having recorded red, green and blue stripes is located in opposition to a photographic material, and then illuminated with light obtained by mixing the three colors from the photographic material, thus making it possible to reproduce the reproduced image in the photographic material at one exposure operation, while dispensing with a photolithographic step, precise alignment or registration, etc. The process for making a filter photographic material involves laminating together, in opposite relation, a first laminate obtained by laminating a filter layer and an adhesive layer successively on a support and a second laminate obtained by laminating a photoconductive layer and an transparent electrode layer successively on a carrier film through a release layer, followed by removal of the carrier film, thus rendering it possible to prevent the discoloration, fading, etc. of the filter layer and making its preparation more efficient.
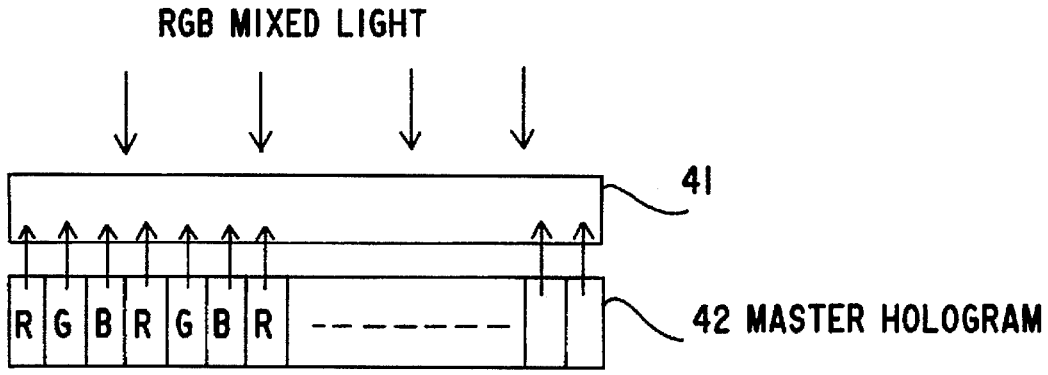
8 Claims, 7 Drawing Sheets