US009638447B2

(12) **United States Patent**
Yamashita et al.

(10) **Patent No.: US 9,638,447 B2**
(45) **Date of Patent: May 2, 2017**

(54) **AIR-CONDITIONING APPARATUS**

(75) Inventors: **Koji Yamashita**, Tokyo (JP); **Shinichi Wakamoto**, Tokyo (JP); **Naofumi Takenaka**, Tokyo (JP); **Kosuke Tanaka**, Tokyo (JP)

(73) Assignee: **MITSUBISHI ELECTRIC CORPORATION**, Tokyo (JP)

(*) Notice: Subject to any disclaimer, the term of this patent is extended or adjusted under 35 U.S.C. 154(b) by 655 days.

(21) Appl. No.: **14/119,951**

(22) PCT Filed: **Jun. 29, 2011**

(86) PCT No.: **PCT/JP2011/003702**

§ 371 (c)(1),
(2), (4) Date: **Nov. 25, 2013**

(87) PCT Pub. No.: **WO2013/001572**

PCT Pub. Date: **Jan. 3, 2013**

(65) **Prior Publication Data**

US 2014/0083123 A1 Mar. 27, 2014

(51) **Int. Cl.**
F25B 7/00 (2006.01)
F25B 45/00 (2006.01)
(Continued)

(52) **U.S. Cl.**
CPC ***F25B 49/02*** (2013.01); ***F25B 13/00*** (2013.01); *F25B 2313/003* (2013.01); *F25B 2313/006* (2013.01); *F25B 2313/0231* (2013.01); *F25B 2313/0232* (2013.01); *F25B 2313/0233* (2013.01); *F25B 2313/0272* (2013.01); *F25B 2313/0294* (2013.01); *F25B 2313/02732* (2013.01); *F25B 2313/02741* (2013.01); *F25B 2313/0314* (2013.01); *F25B 2500/19* (2013.01);
(Continued)

(58) **Field of Classification Search**
CPC F25B 13/00; F25B 2313/006; F25B 2313/0232; F25B 2500/19; F25B 2700/1933; Y02B 30/741
USPC 62/175, 292, 324.6
See application file for complete search history.

(56) **References Cited**

U.S. PATENT DOCUMENTS

5,657,637 A * 8/1997 Mertens B41F 7/24 62/175
6,233,961 B1 * 5/2001 Ashida F25B 45/00 62/292
(Continued)

FOREIGN PATENT DOCUMENTS

JP 10-288411 A 10/1998
JP 2000-105005 A 4/2000
(Continued)

OTHER PUBLICATIONS

Extended European Search Report dated Jan. 26, 2015 issued in corresponding EP patent application No. 11868550.2.
(Continued)

Primary Examiner — Henry Crenshaw
(74) *Attorney, Agent, or Firm* — Posz Law Group, PLC

(57) **ABSTRACT**

In an air-conditioning apparatus, a controller controls an amount of refrigerant injection into a compressor by controlling an opening area of an expansion device such that the electric power consumption of the compressor becomes smaller, or such that a heating capacity or a cooling capacity of an intermediate heat exchanger becomes larger.
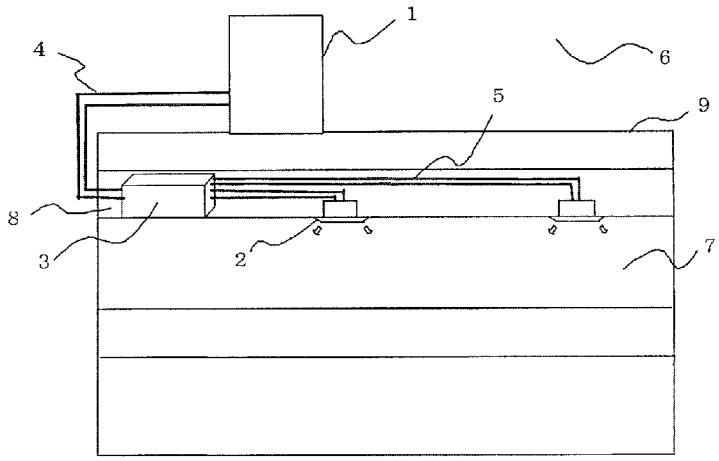
12 Claims, 15 Drawing Sheets