US009636947B2

(12) **United States Patent**
Lim

(10) **Patent No.: US 9,636,947 B2**
(45) **Date of Patent: May 2, 2017**

(54) **BICYCLE AXLE ASSEMBLY**

(75) Inventor: **Puat Thiam Lim**, Jurong Town (SG)

(73) Assignee: **Shimano (Singapore) PTE. LTD**, Jurong Town (SG)

(*) Notice: Subject to any disclaimer, the term of this patent is extended or adjusted under 35 U.S.C. 154(b) by 961 days.

(21) Appl. No.: **13/422,623**

(22) Filed: **Mar. 16, 2012**

(65) **Prior Publication Data**

US 2013/0241271 A1 Sep. 19, 2013

(51) **Int. Cl.**

B60B 35/00	(2006.01)
B60B 27/02	(2006.01)
B62K 25/02	(2006.01)
B60B 27/00	(2006.01)

(52) **U.S. Cl.**

CPC ***B60B 27/026*** (2013.01); ***B62K 25/02*** (2013.01); *B60B 27/0005* (2013.01); *B60B 2900/113* (2013.01); *B60B 2900/531* (2013.01); *B60B 2900/541* (2013.01); *B62K 2206/00* (2013.01)

(58) **Field of Classification Search**

CPC B60B 27/00; B60B 35/00; B62K 21/02; B62K 2206/00; F16B 37/0864

USPC 301/110.5, 124.1, 124.2; 280/279; 411/432, 384, 389, 397, 916, 917

See application file for complete search history.

(56) **References Cited**

U.S. PATENT DOCUMENTS

4,964,287	A *	10/1990	Gaul	70/233
5,447,362	A	9/1995	Nagano	
6,196,781	B1 *	3/2001	Yang	411/384
6,241,322	B1	6/2001	Phillips	
6,669,306	B1	12/2003	Hara et al.	
8,075,065	B2 *	12/2011	Mercat et al.	301/124.2
2006/0181139	A1 *	8/2006	Nilsen et al.	301/37.374
2009/0072613	A1 *	3/2009	Inoue et al.	301/132
2012/0261979	A1	10/2012	Ashman	
2013/0011213	A1 *	1/2013	Marks et al.	411/274

FOREIGN PATENT DOCUMENTS

DE	297 14 945	U1	11/1997
EP	1 413 506	B1	2/2006
WO	WO 99/19636	A1	4/1999
WO	WO 01/57347	A1	8/2001

OTHER PUBLICATIONS

U.S. Appl. No. 13/309,564, filed Dec. 2, 2011, Lim.

* cited by examiner

Primary Examiner — S. Joseph Morano
Assistant Examiner — Jean Charleston
(74) *Attorney, Agent, or Firm* — Global IP Counselors, LLP

(57) **ABSTRACT**

A bicycle axle assembly has a nut, a main body member and an adjustment structure. The nut includes a bore having an internal thread. The main body member includes a nut bore. The nut is disposed in the nut bore. The adjustment structure adjustably couples the nut to move axially with respect to the main body member.
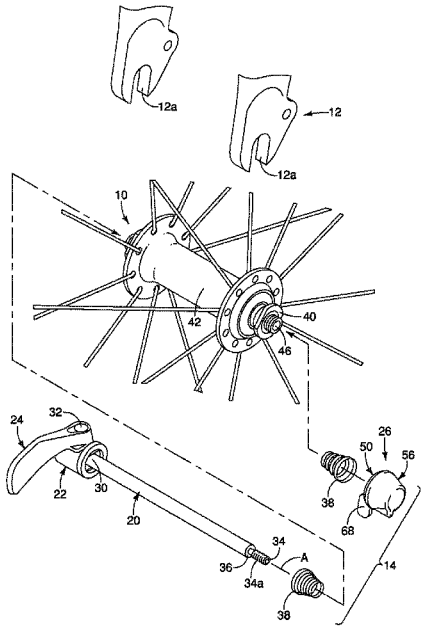
29 Claims, 13 Drawing Sheets