United States Patent [19]

Fergason

[11] **4,435,047**

[45] **Mar. 6, 1984**

[54] **ENCAPSULATED LIQUID CRYSTAL AND METHOD**

[75] Inventor: **James L. Fergason**, Kent, Ohio

[73] Assignee: **Manchester R & D Partnership**, Pepper Pike, Ohio

[21] Appl. No.: **302,780**

[22] Filed: **Sep. 16, 1981**

[51] **Int. Cl.**[3] **G02F 1/13**

[52] **U.S. Cl.** ..... **350/334**; 350/349; 350/350 R; 350/347 V; 428/1

[58] **Field of Search** ..... 252/316; 428/1; 350/331 R, 334, 349, 350 R, 347 V, 340, 341

[56] **References Cited**

U.S. PATENT DOCUMENTS

3,341,466	9/1967	Brynko et al.	252/316
3,565,818	2/1971	Bayless et al.	252/316
3,578,482	5/1971	Whitaker et al.	252/316 X
3,578,844	5/1971	Churchill et al.	252/316 X
3,585,381	6/1971	Hodson et al.	428/1 X
3,600,060	8/1971	Churchill et al.	428/1 X
3,617,374	11/1971	Hodson et al.	428/1
3,697,297	10/1972	Churchill et al. .	
3,720,623	3/1973	Cartmell et al.	350/350 R X
3,787,110	1/1974	Berreman et al.	350/341
3,852,092	12/1974	Patterson et al. .	
3,871,904	3/1975	Haas et al. .	
3,872,050	3/1975	Benton et al. .	
3,951,845	4/1976	Cole .	
3,974,087	8/1976	Gray et al.	350/350 R X
4,048,358	9/1977	Shanks .	
4,077,260	3/1978	Gray et al.	350/350 S X
4,161,557	7/1979	Suzuki et al. .	
4,182,700	1/1980	Benton et al. .	

FOREIGN PATENT DOCUMENTS

2103591	8/1972	Fed. Rep. of Germany .
55-96922	of 0000	Japan .
47-16098	8/1972	Japan .
49-96694	9/1974	Japan .
50-36993	10/1975	Japan .
51-30998	9/1976	Japan .
54-2580	5/1979	Japan .
54-31465	11/1979	Japan .
1161039	1/1968	United Kingdom .
1376926	11/1971	United Kingdom .

OTHER PUBLICATIONS

DeGennes, P. G. *The Physics of Liquid Crystals*, (Clarendon Press, Oxford 1974) pp. 215–220.

Proceedings of the IEEE, vol. 56, No. 12–John A. Van Raalte "Reflective Liquid Crystal Television Display".

J. Appl. Phys. vol. 45, No. 11 Nov. 1974, White & Taylor "New Absorptive Mode Reflective Liquid-Crystal Display Device".

Primary Examiner—John K. Corbin
Assistant Examiner—Richard F. Gallivan
Attorney, Agent, or Firm—Maky, Renner, Otto & Boisselle

[57] **ABSTRACT**

Briefly, according to one aspect of the invention, liquid crystal material, and especially nematic material, is encapsulated; according to another aspect the encapsulated liquid crystal material is used in liquid crystal devices, such as relatively large size visual display devices; and according to further aspects there are provided methods for encapsulating liquid crystal material and for making a liquid crystal device using such encapsulated liquid crystal material.
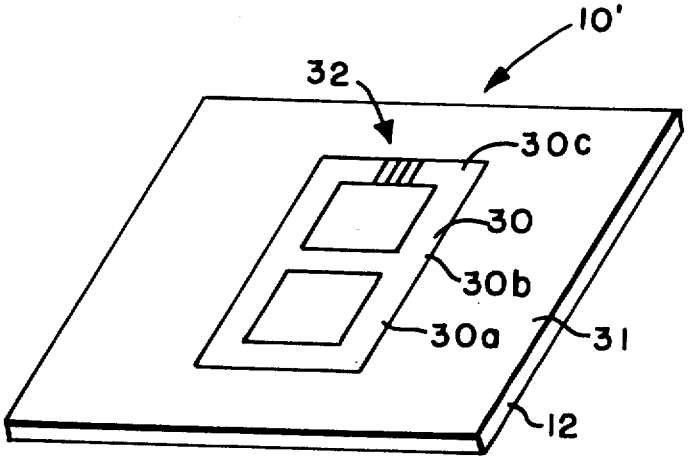
111 Claims, 7 Drawing Figures