Dec. 13, 1955 E. D. MALOY 2,726,447

HAIR CLIPPERS

Filed May 12, 1952 3 Sheets-Sheet 1

FIG. 1

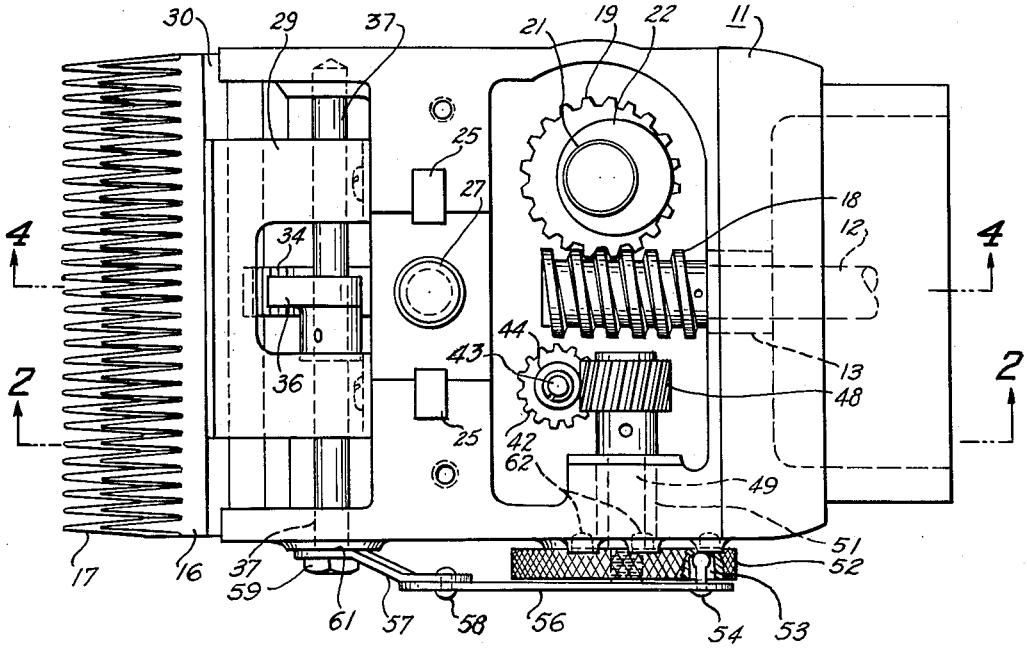

FIG. 2

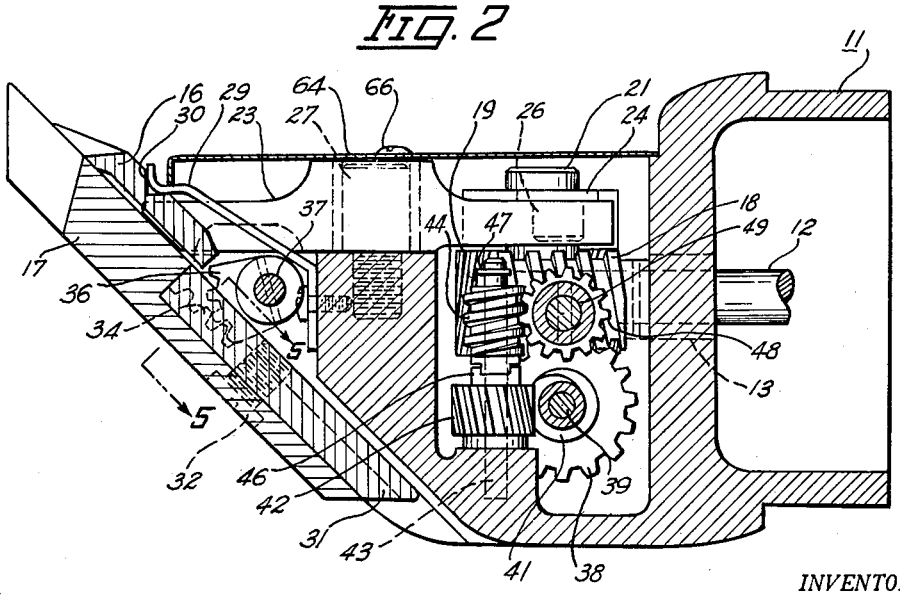

INVENTOR.
ERNEST D. MALOY
BY
Flournoy Corey
ATTORNEY.