US005126247A

United States Patent [19]

Palmer et al.

[11] Patent Number: 5,126,247

[45] Date of Patent: Jun. 30, 1992

[54] METHOD, SYSTEM AND DEVICES FOR THE ASSAY AND DETECTION OF BIOCHEMICAL MOLECULES

[75] Inventors: **John L. Palmer**, Philadelphia; **James B. Johnston**, Ambler; **Marsha W. Timmerman**, Allentown, all of Pa.

[73] Assignee: **Enzymatics, Inc.**, Horsham, Pa.

[21] Appl. No.: **160,595**

[22] Filed: **Feb. 26, 1988**

[51] **Int. Cl.**[5] **C12Q 1/26**; C12M 1/40

[52] **U.S. Cl.** **435/25**; 435/4; 435/26; 435/175; 435/174; 435/805; 435/810; 435/288; 435/292; 435/294

[58] **Field of Search** 435/4, 25, 26, 175, 435/176, 177, 178, 179, 805, 810, 288, 292, 293, 294, 295, 296; 606/181

[56] **References Cited**

U.S. PATENT DOCUMENTS

3,964,871 6/1976 Hochstrasser 23/253
4,556,634 3/1985 Misaki et al. 435/25
4,629,697 12/1986 Limbach et al. 435/26
4,761,381 8/1988 Blatt et al. .

FOREIGN PATENT DOCUMENTS

0117032 6/1984 European Pat. Off. .

Primary Examiner—Esther L. Kepplinger
Assistant Examiner—Toni R. Scheiner
Attorney, Agent, or Firm—Finnegan, Henderson, Farabow, Garrett & Dunner

[57] **ABSTRACT**

Oxygen-independent methods, systems and devices for the enzymatic colorimetric assay and detection of biochemical analytes. Two systems are described, both of which produce less than one equivalent of dye per equivalent of substrate, maintaining dye concentrations in the range where Beer's law predicts a linear color-concentration relationship. One system produces an analog color signal from an analog analyte input, the other system produces a digital color signal from an analog analyte input.
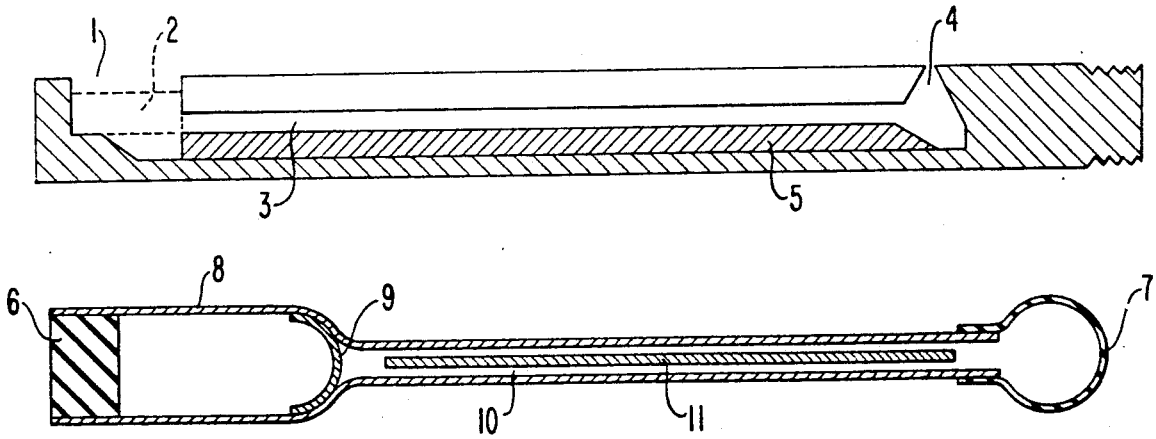
61 Claims, 1 Drawing Sheet