US009121647B2

(12) **United States Patent**
Cui et al.

(10) **Patent No.: US 9,121,647 B2**
(45) **Date of Patent: Sep. 1, 2015**

(54) **SYSTEM AND PROCESS FOR STORING COLD ENERGY**

(75) Inventors: **Jun Cui**, Richland, WA (US); **Jamelyn D. Holladay**, Kennewick, WA (US)

(73) Assignee: **BATTELLE MEMORIAL INSTITUTE**, Richland, WA (US)

(*) Notice: Subject to any disclaimer, the term of this patent is extended or adjusted under 35 U.S.C. 154(b) by 1085 days.

(21) Appl. No.: **13/076,257**

(22) Filed: **Mar. 30, 2011**

(65) **Prior Publication Data**

US 2012/0247706 A1 Oct. 4, 2012

(51) **Int. Cl.**

F25D 3/00	(2006.01)
F28D 20/00	(2006.01)
F25B 23/00	(2006.01)
C22C 14/00	(2006.01)
C22C 19/03	(2006.01)

(52) **U.S. Cl.**

CPC ***F28D 20/0056*** (2013.01); ***C22C 14/00*** (2013.01); ***C22C 19/03*** (2013.01); ***F25B 23/00*** (2013.01); *Y02E 60/142* (2013.01)

(58) **Field of Classification Search**

CPC F28D 20/0056; F25B 23/00
USPC 165/10
See application file for complete search history.

(56) **References Cited**

U.S. PATENT DOCUMENTS

3,036,444	A *	5/1962	Cochran	62/467
6,367,281	B1 *	4/2002	Hugenroth	62/467
2007/0227544	A1 *	10/2007	Swann et al.	128/831
2008/0254346	A1 *	10/2008	Burstall et al.	429/72
2009/0200007	A1 *	8/2009	Foy et al.	165/287

FOREIGN PATENT DOCUMENTS

WO	9927313	6/1999
WO	02084185 A1	10/2002

OTHER PUBLICATIONS

International Search Report/Written Opinion for International Application No. PCT/US2012/021531, International Filing Date Jan. 17, 2012, Date of Mailing May 23, 2012.

Vives, E., et al., Temperature contour maps at the strain-induced martensitic transition of a Cu—Zn—Al shape memory single crystal, Applied Physics Letters. vol. 98, No. 1, 011902, Jan. 2011.

* cited by examiner

Primary Examiner — Cassey D Bauer
(74) *Attorney, Agent, or Firm* — James D. Matheson

(57) **ABSTRACT**

A system and method for storing cold energy are detailed. The system includes a solid refrigerant in a structured form that stores cold energy. Upon deformation, the solid refrigerant transforms into a high energy deformed state from a low energy non-deformed state. In the deformed state, the solid refrigerant stores cold energy that can be released to a desired location upon demand.
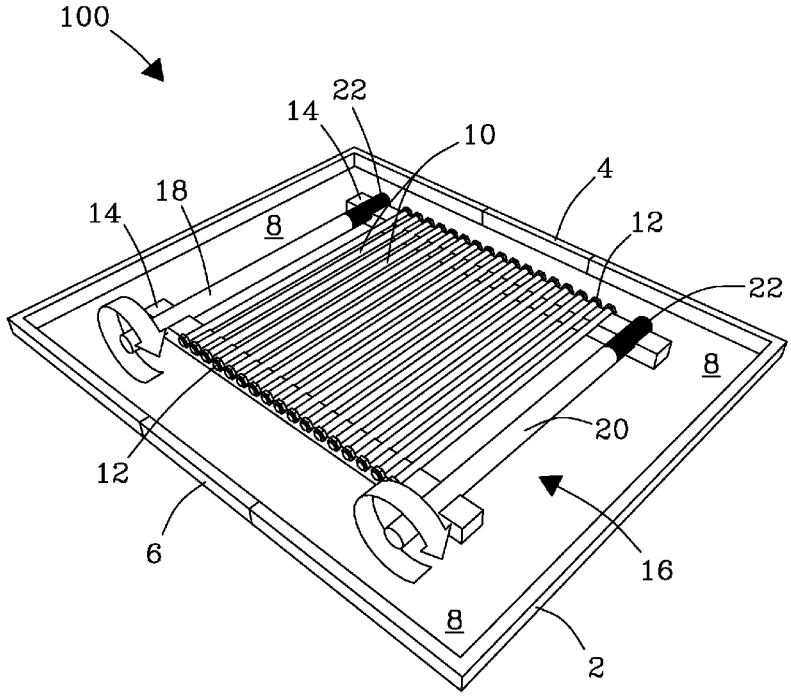
10 Claims, 7 Drawing Sheets