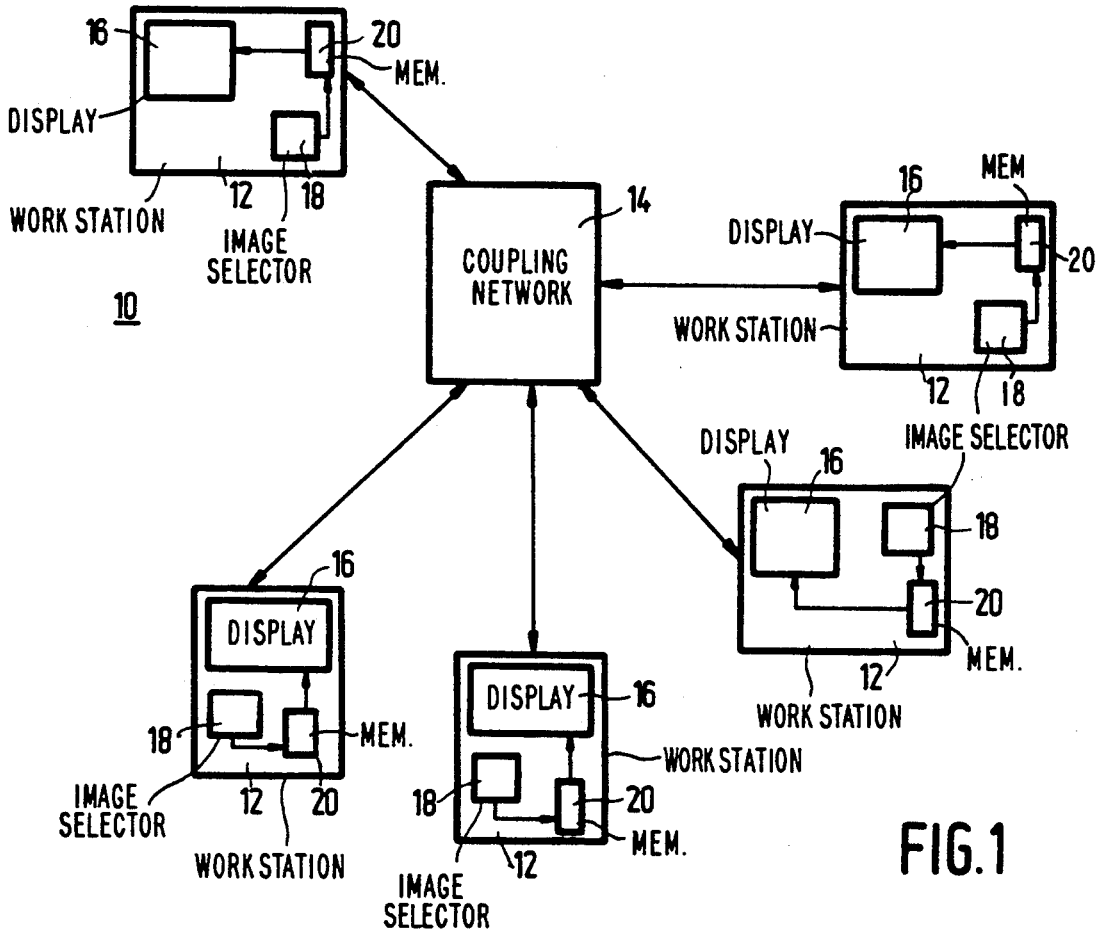
16
20
MEM.
DISPLAY
WORK STATION
12
18
IMAGE SELECTOR
10
COUPLING NETWORK
14
16
MEM
DISPLAY
20
WORK STATION
12
18
IMAGE SELECTOR
DISPLAY
16
18
20
MEM.
12
WORK STATION
16
DISPLAY
18
MEM.
IMAGE SELECTOR
12
20
WORK STATION
DISPLAY
16
WORK STATION
18
20
MEM.
12
IMAGE SELECTOR

FIG.1

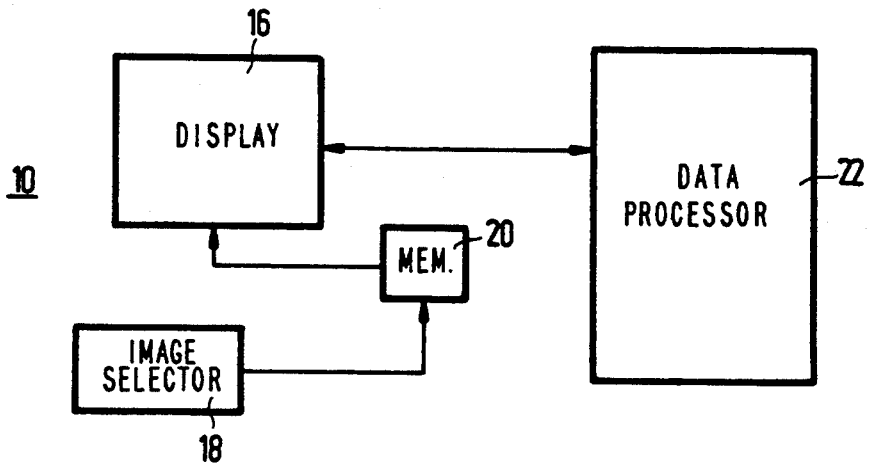
16
DISPLAY
10
DATA PROCESSOR
22
MEM.
20
IMAGE SELECTOR
18

FIG.2