US009411147B2

(12) **United States Patent**
Roider et al.

(10) **Patent No.: US 9,411,147 B2**
(45) **Date of Patent: *Aug. 9, 2016**

(54) **TELESCOPE WITH MUTUALLY CONNECTABLE MODULES**

(75) Inventors: **Konrad A. Roider**, Mils (AT); **Ludwig Pernstich**, Rum (AT); **Benno Miller**, Innsbruck (AT)

(73) Assignee: **Swarovski-Optik KG.** (AT)

(*) Notice: Subject to any disclaimer, the term of this patent is extended or adjusted under 35 U.S.C. 154(b) by 0 days.

This patent is subject to a terminal disclaimer.

(21) Appl. No.: **13/336,139**

(22) Filed: **Dec. 23, 2011**

(65) **Prior Publication Data**

US 2012/0162757 A1 Jun. 28, 2012

(30) **Foreign Application Priority Data**

Dec. 23, 2010 (AT) ..... A 2132/2010

(51) **Int. Cl.**

G02B 27/02	(2006.01)
G02B 23/00	(2006.01)
G02B 7/04	(2006.01)
G02B 7/10	(2006.01)
G02B 23/02	(2006.01)

(52) **U.S. Cl.**

CPC ***G02B 23/00*** (2013.01); ***G02B 7/04*** (2013.01); ***G02B 7/10*** (2013.01); ***G02B 23/02*** (2013.01)

(58) **Field of Classification Search**

USPC 359/399

See application file for complete search history.

(56) **References Cited**

U.S. PATENT DOCUMENTS

2,662,443	A	12/1953	Loeck	
3,504,965	A *	4/1970	Lustig	352/140
3,981,021	A	9/1976	Beecher	
4,249,793	A	2/1981	Uehara	
4,249,799	A *	2/1981	Iglesias	359/827
4,293,185	A *	10/1981	Yamazaki et al.	359/422
4,302,077	A	11/1981	Sato et al.	
4,488,037	A *	12/1984	Ishibai	G02B 7/06 250/201.2
4,600,277	A	7/1986	Murray, Jr.	
4,873,580	A *	10/1989	Katoh et al.	386/224
5,053,794	A *	10/1991	Benz	396/432
5,305,142	A	4/1994	Phillips et al.	
5,453,875	A	9/1995	Kolsch et al.	
5,604,630	A *	2/1997	Palmer	359/409
5,644,425	A *	7/1997	Palmer	359/409

(Continued)

FOREIGN PATENT DOCUMENTS

CN	2718606	Y	8/2005
CN	201364409	Y	12/2009

(Continued)

OTHER PUBLICATIONS

Austrian Application No. 2131/2010 filed Dec. 23, 2010. (English translation of abstract only).

(Continued)

Primary Examiner — Arnel C Lavarias

(74) *Attorney, Agent, or Firm* — Lerner, David, Littenberg, Krumholz & Mentlik, LLP

(57) **ABSTRACT**

A telescope made up of mutually connectable modules, which telescope comprises at least a lens module and an eyepiece module, and the lens module and eyepiece module each have a connection interface for connecting the modules, wherein an optical system for changing the image magnification is integrated in the lens module.
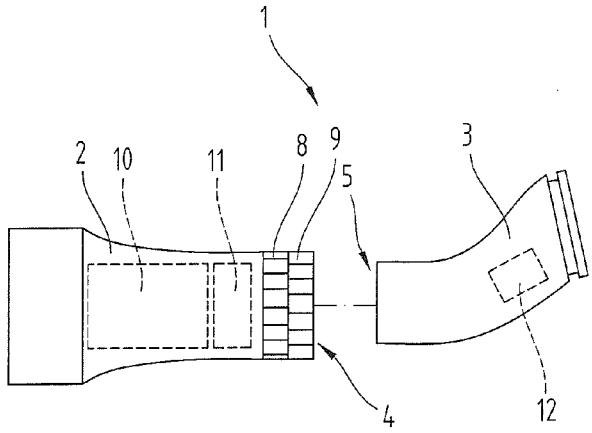
16 Claims, 5 Drawing Sheets