US009410647B2

(12) **United States Patent**
Steen et al.

(10) **Patent No.: US 9,410,647 B2**
(45) **Date of Patent: Aug. 9, 2016**

(54) **ANTI-ROTATION SYSTEM FOR BOX AND PIN CONNECTION**

(71) Applicant: **Vetco Gray Inc.**, Houston, TX (US)

(72) Inventors: **Thomas Lowell Steen**, The Woodlands, TX (US); **Joseph William Pallini**, Tomball, TX (US); **Daniel Caleb Benson**, Spring, TX (US); **David Lawrence Ford**, Houston, TX (US); **Kevin Edward O'Dell**, Katy, TX (US); **Stephen David Peters**, Houston, TX (US); **William Rey Patterson, Jr.**, Houston, TX (US)

(73) Assignee: **Vetco Gray Inc.**, Houston, TX (US)

(*) Notice: Subject to any disclaimer, the term of this patent is extended or adjusted under 35 U.S.C. 154(b) by 377 days.

(21) Appl. No.: **13/956,563**

(22) Filed: **Aug. 1, 2013**

(65) **Prior Publication Data**

US 2014/0103645 A1 Apr. 17, 2014

Related U.S. Application Data

(60) Provisional application No. 61/713,313, filed on Oct. 12, 2012.

(51) **Int. Cl.**

F16L 15/08	(2006.01)
E21B 17/043	(2006.01)
F16B 1/02	(2006.01)
F16B 21/20	(2006.01)
F16B 39/282	(2006.01)

(52) **U.S. Cl.**

CPC ***F16L 15/08*** (2013.01); ***E21B 17/043*** (2013.01); *F16B 1/02* (2013.01); *F16B 21/20* (2013.01); *F16B 39/282* (2013.01)

(58) **Field of Classification Search**

CPC E21B 17/043; F16L 15/08
USPC 285/92
See application file for complete search history.

(56) **References Cited**

U.S. PATENT DOCUMENTS

1,668,921	A *	5/1928	Miks	E21B 17/043 285/90
3,608,933	A *	9/1971	Lee	E21B 17/043 285/89
4,406,485	A *	9/1983	Giebeler	E21B 33/13 285/92
4,711,471	A	12/1987	Pallini, Jr. et al.	
4,757,593	A	7/1988	Pallini, Jr. et al.	
4,900,066	A	2/1990	Brammer et al.	
4,902,047	A *	2/1990	Marietta	F16L 15/08 285/92
5,044,676	A	9/1991	Burton et al.	
5,050,691	A *	9/1991	Moses	E21B 17/043 285/92
6,619,392	B2	9/2003	Marangoni et al.	

(Continued)

FOREIGN PATENT DOCUMENTS

GB	2087022	A *	5/1982	E02D 5/523

Primary Examiner — David E Bochna
(74) *Attorney, Agent, or Firm* — Bracewell LLP; James E. Bradley

(57) **ABSTRACT**

An anti-rotation system for use in retaining a threaded connection between a pin and a box. The anti-rotation system includes a key that sets in a recess formed in one of the box or pin. The key is selectively in contact with one of the other of the box or pin, and is activated when the threaded connection begins to decouple. The key is profiled and operates in a cam like fashion to wedge itself between the box and pin when these members begin to decouple and prevents further relative rotation.
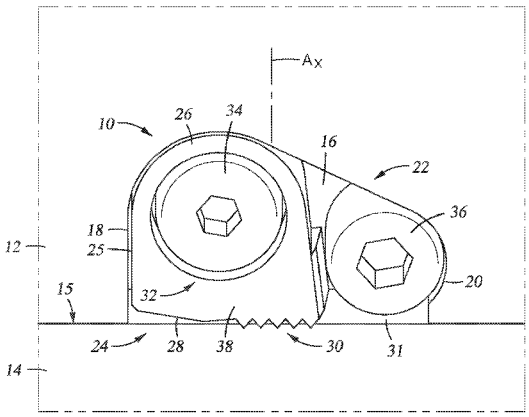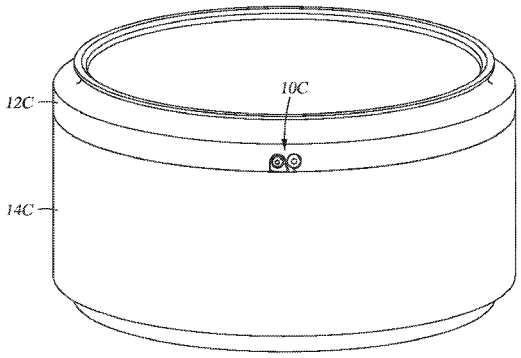
20 Claims, 13 Drawing Sheets