US005410447A

United States Patent [19]

Miyagawa et al.

[11] Patent Number: 5,410,447

[45] Date of Patent: Apr. 25, 1995

[54] **PORTABLE COMPUTER COMPRISING KEYBOARD AND COORDINATE INPUT TABLET CONNECTED BY TWO PERPENDICULARLY ARRANGED HINGES**

[75] Inventors: **Shigenori Miyagawa**, Tokyo; **Koichi Kobayashi**, Hanno; **Shimpei Kunii**, Tokyo; **Shizuo Kamio**, Tokyo; **Hiroyuki Sakamoto**, Tokyo; **Fumitaka Sato**, Tokyo; **Ryoichi Ishiura**, Matsudo, all of Japan

[73] Assignee: **Kabushiki Kaisha Toshiba**, Kawasaki, Japan

[21] Appl. No.: **114,090**

[22] Filed: **Aug. 31, 1993**

Related U.S. Application Data

[60] Division of Ser. No. 41,890, Apr. 2, 1993, Pat. No. 5,268,817, which is a continuation of Ser. No. 692,250, Apr. 26, 1991, abandoned.

[30] **Foreign Application Priority Data**

Apr. 27, 1990	[JP]	Japan	2-112775
Nov. 21, 1990	[JP]	Japan	2-318403
Nov. 21, 1990	[JP]	Japan	2-318413
Nov. 21, 1990	[JP]	Japan	2-318414

[51] **Int. Cl.**[6] **H05K 7/16**; G06F 1/16

[52] **U.S. Cl.** **361/681**

[58] **Field of Search** 248/917-923; 364/708.1; 312/223.2; 362/680-682

[56] **References Cited**

U.S. PATENT DOCUMENTS

4,330,776	5/1982	Dennison, Jr. et al. .	
4,545,023	10/1985	Mizzi .	
4,825,395	4/1989	Kinser, Jr. et al. .	
4,842,531	6/1989	Takemura .	
4,859,092	8/1989	Makita .	
4,903,222	2/1990	Carter et al. .	
4,960,256	10/1990	Chihara et al. .	
5,016,849	5/1991	Wu	248/923 X
5,034,858	7/1991	Kawamoto et al.	361/681 X
5,115,374	5/1992	Hongoh .	
5,168,423	12/1992	Ohgami et al. .	

FOREIGN PATENT DOCUMENTS

0246021	11/1987	European Pat. Off. .
0251492	1/1988	European Pat. Off. .
0307892	3/1989	European Pat. Off. .
0355203	2/1990	European Pat. Off. .
63-39731	3/1988	Japan .
21040	of 1906	United Kingdom .

OTHER PUBLICATIONS

Judith A. Layman and Mark A. Smith, "Mechanical Design of the HP-18C and HP-28C Handheld Calculators," Hewlett-Packard Journal, Aug. 1987, No. 8, pp. 17-20.

Koga et al., "Development and Evaluation of an Input Integrated Flat Panel Display," Journal of Academic Thesis on Information Systems, vol. 27, No. 6, Jun. 1986. (In Japanese).

Epson "Equity LT", Mar. 1988. Brochure.

NEC ProSpeed 386 Catalog, Copyright 1988.

"Two-Sided Keyboard for a Data Terminal," IBM Technical Disclosure Bulletin, vol. 24, No. 1B, Jun. 1981, p. 714.

Primary Examiner—Michael W. Phillips

Attorney, Agent, or Firm—Finnegan, Henderson, Farabow, Garrett & Dunner

[57] **ABSTRACT**

A main body case for storing a keyboard and an upper case for storing an integrated display/input device are coupled by two hinge units arranged perpendicularly to one another to be arbitrarily pivotal from a state wherein the keyboard faces the integrated display/input device to a state wherein the back surfaces of the keyboard and the integrated display/input device face each other.
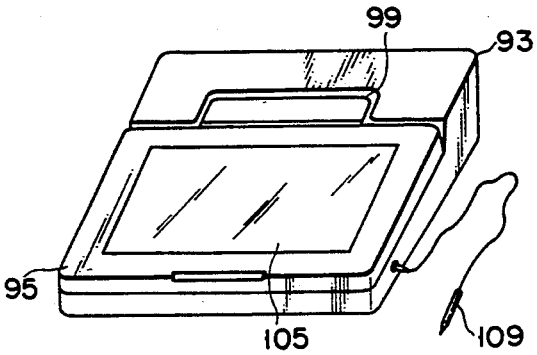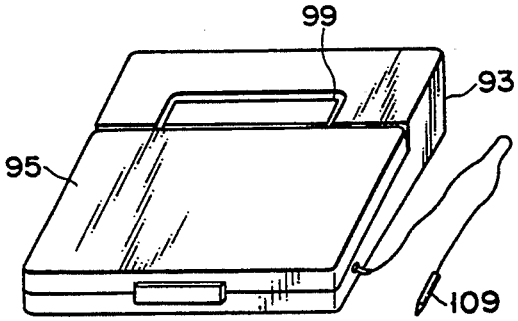
4 Claims, 22 Drawing Sheets