US009409547B2

(12) **United States Patent**
Baumgartner et al.

(10) **Patent No.: US 9,409,547 B2**
(45) **Date of Patent: Aug. 9, 2016**

(54) **SENSOR**

(71) Applicant: **Takata AG**, Aschaffenburg (DE)

(72) Inventors: **Peter Baumgartner**, Günzburg (DE); **Hermann Hasse**, Lonsee (DE); **Oswald Lustig**, Asselfingen (DE); **Thomas Bertram**, Senden (DE)

(73) Assignee: **TAKATA AG**, Aschaffenburg (DE)

(*) Notice: Subject to any disclaimer, the term of this patent is extended or adjusted under 35 U.S.C. 154(b) by 69 days.

(21) Appl. No.: **14/357,493**

(22) PCT Filed: **Nov. 7, 2012**

(86) PCT No.: **PCT/DE2012/200071**

§ 371 (c)(1),
(2) Date: **May 9, 2014**

(87) PCT Pub. No.: **WO2013/071928**

PCT Pub. Date: **May 23, 2013**

(65) **Prior Publication Data**

US 2014/0305203 A1 Oct. 16, 2014

(30) **Foreign Application Priority Data**

Nov. 18, 2011 (DE) 10 2011 086 656

(51) **Int. Cl.**

G01D 11/24	(2006.01)
B60R 22/48	(2006.01)
B60R 22/40	(2006.01)

(52) **U.S. Cl.**

CPC ***B60R 22/48*** (2013.01); ***B60R 22/40*** (2013.01); *B60R 2022/401* (2013.01); *B60R 2022/4808* (2013.01)

(58) **Field of Classification Search**

USPC 73/431

See application file for complete search history.

(56) **References Cited**

U.S. PATENT DOCUMENTS

3,927,286	A	12/1975	Fohl
4,350,313	A	9/1982	Adomeit
4,687,253	A	8/1987	Ernst et al.
4,934,626	A	6/1990	Kimura
5,178,410	A	1/1993	Thuen et al.
5,209,421	A	5/1993	Fujiwara et al.
5,251,843	A	10/1993	Kielwein et al.
5,340,052	A	8/1994	Ernst
5,443,224	A	8/1995	Patterson et al.

(Continued)

FOREIGN PATENT DOCUMENTS

BR	WO 2008049181	A1 *	5/2008	..... B60R 22/40
DE	2 228 683	A1	12/1973	

(Continued)

OTHER PUBLICATIONS

International Search Report; PCT/DE2012/200071; issued May 23, 2013; 3 pages.

Primary Examiner — Lisa Caputo
Assistant Examiner — Jamel Williams
(74) *Attorney, Agent, or Firm* — Gordon & Rees LLP

(57) **ABSTRACT**

The invention relates inter alia to a sensor (**10**), in particular for triggering a vehicle security device (**1**). According to the invention the sensor (**10**) comprises a support element (**40**) and a housing part (**70**), which holds the support element (**40**), and the housing part (**70**) consists of a softer material than the support element (**40**).
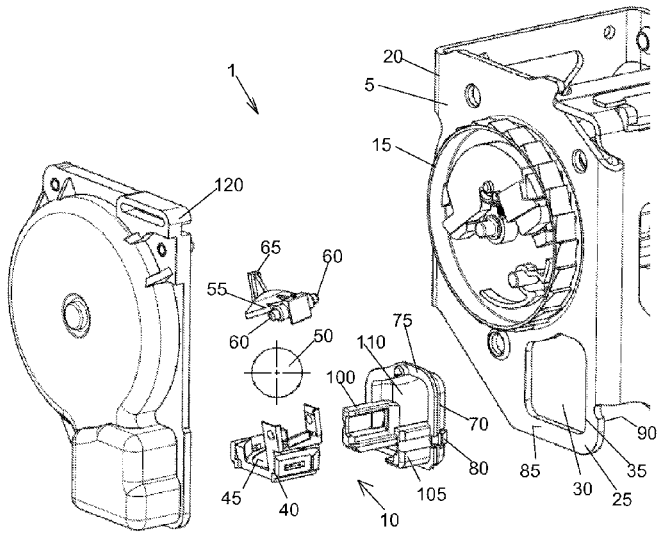
7 Claims, 8 Drawing Sheets