US009408947B2

(12) **United States Patent**
Grandt et al.

(10) **Patent No.: US 9,408,947 B2**
(45) **Date of Patent: Aug. 9, 2016**

(54) **NON-METALLIC TUBES FOR MEDICAL DEVICES**

(75) Inventors: **Axel Grandt**, Strassberg (DE); **Andrew Jeffrey**, Hythe (GB)

(73) Assignee: **ABBOTT LABORATORIES VASCULAR ENTERPRISES LIMITED**, Dublin (IE)

(*) Notice: Subject to any disclaimer, the term of this patent is extended or adjusted under 35 U.S.C. 154(b) by 971 days.

(21) Appl. No.: **13/386,886**

(22) PCT Filed: **Jul. 30, 2010**

(86) PCT No.: **PCT/EP2010/004678**

§ 371 (c)(1),
(2), (4) Date: **May 3, 2012**

(87) PCT Pub. No.: **WO2011/012314**

PCT Pub. Date: **Feb. 3, 2011**

(65) **Prior Publication Data**

US 2012/0310180 A1 Dec. 6, 2012

(30) **Foreign Application Priority Data**

Jul. 31, 2009 (EP) 09009923

(51) **Int. Cl.**
A61L 29/12 (2006.01)
A61L 29/18 (2006.01)

(52) **U.S. Cl.**
CPC ***A61L 29/126*** (2013.01); ***A61L 29/18*** (2013.01)

(58) **Field of Classification Search**
CPC A61M 25/0045; A61M 2025/0042; A61M 2025/0047; A61M 2025/0046; A61M 25/005; A61L 29/18; A61L 29/126
USPC 604/264, 523, 524, 93.01
See application file for complete search history.

(56) **References Cited**

U.S. PATENT DOCUMENTS

4,909,796	A	3/1990	Hagio et al.	
5,378,237	A	1/1995	Boussignac et al.	
6,325,780	B1	12/2001	Schaible et al.	
2002/0146557	A1	10/2002	Claude et al.	
2004/0078052	A1 *	4/2004	St. Pierre et al.	606/194
2004/0082965	A1 *	4/2004	Beckham	606/192
2008/0103444	A1 *	5/2008	Jimenez	604/103.09
2009/0165881	A1 *	7/2009	Tegg et al.	138/137

FOREIGN PATENT DOCUMENTS

EP	1 388 346	2/2004
WO	WO 03/000307	1/2003

OTHER PUBLICATIONS

Celsite Ports with Anthron Catheters Product Information, RAFI International, Retrieved Aug. 3, 2012, http://www.rafi.ro/fisiere_produse/66.pdf.

RAUMEDIC—micro-extrusion from high-temperature thermoplastics brochure, RAUMEDIC AG, Germany. Retrieved Aug. 3, 2012. URL: http://www.raumedic.de/fileadmin/user_upload/service/en/RAUMEDIC_micro-extrusion.pdf.

* cited by examiner

Primary Examiner — Kami A Bosworth
Assistant Examiner — Hamza Darb
(74) *Attorney, Agent, or Firm* — Workman Nydegger; John Kwok

(57) **ABSTRACT**

The present invention refers to medical devices comprising a non-metallic micro tube containing FRP (fiber reinforced polymer), especially to respective tubings, used for constructing catheters like balloon dilation catheters, stent delivery catheters, guiding catheters and diagnostic catheters.
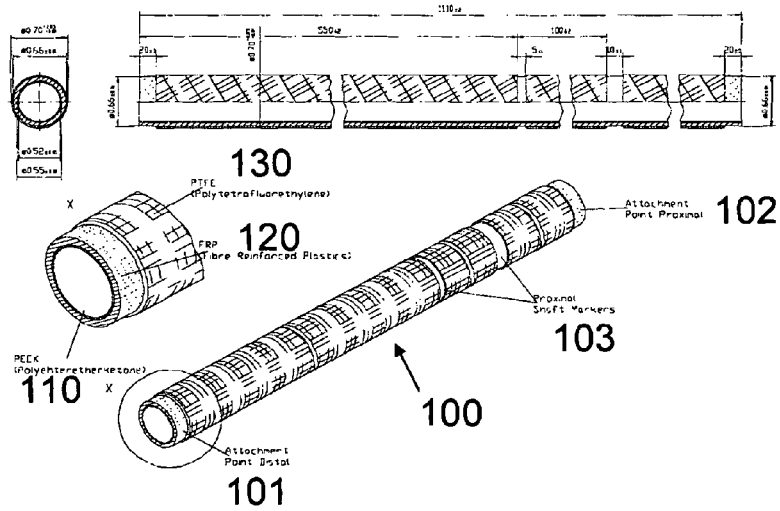
9 Claims, 2 Drawing Sheets