US009408647B2

(12) **United States Patent**
Cheney

(10) **Patent No.: US 9,408,647 B2**
(45) **Date of Patent: *Aug. 9, 2016**

(54) **METHOD AND APPARATUS FOR USE OF A COMPRESSING PLATE**

(71) Applicant: **BioMedical Enterprises, Inc.**, San Antonio, TX (US)

(72) Inventor: **Daniel F. Cheney**, San Antonio, TX (US)

(73) Assignee: **BioMedical Enterprises, Inc.**, San Antonio, TX (US)

(*) Notice: Subject to any disclaimer, the term of this patent is extended or adjusted under 35 U.S.C. 154(b) by 187 days.

This patent is subject to a terminal disclaimer.

(21) Appl. No.: **14/191,809**

(22) Filed: **Feb. 27, 2014**

(65) **Prior Publication Data**

US 2015/0238238 A1 Aug. 27, 2015

(51) **Int. Cl.**

A61B 17/88	(2006.01)
A61B 17/80	(2006.01)
A61B 17/064	(2006.01)
A61B 17/17	(2006.01)
A61B 17/90	(2006.01)
A61B 17/00	(2006.01)

(52) **U.S. Cl.**

CPC ***A61B 17/808*** (2013.01); ***A61B 17/0642*** (2013.01); ***A61B 17/1728*** (2013.01); ***A61B 17/80*** (2013.01); ***A61B 17/8004*** (2013.01); ***A61B 17/8085*** (2013.01); ***A61B 17/8872*** (2013.01); *A61B 2017/00867* (2013.01); *A61B 2017/0645* (2013.01); *A61B 2017/90* (2013.01)

(58) **Field of Classification Search**

CPC A61B 2017/00867; A61B 17/0642; A61B 2017/0645; A61B 17/1728; A61B 17/80; A61B 17/8004; A61B 17/808; A61B 17/8085; A61B 17/8872; A61B 2017/90

See application file for complete search history.

(56) **References Cited**

U.S. PATENT DOCUMENTS

3,779,240	A	12/1973	Kondo	
3,866,607	A	2/1975	Forsythe	
3,939,828	A	2/1976	Mohr et al.	
4,408,601	A	10/1983	Wenk	
4,513,744	A	4/1985	Klaue	
5,634,926	A	6/1997	Jobe	
5,779,707	A	7/1998	Bertholet et al.	
5,785,713	A	7/1998	Jobe	
6,001,110	A	12/1999	Adams	
6,093,188	A	7/2000	Murray	
6,187,009	B1	2/2001	Herzog et al.	
6,325,805	B1	12/2001	Ogilvie et al.	
6,773,437	B2	8/2004	Ogilvie et al.	
7,115,129	B2	10/2006	Heggeness	
7,186,254	B2 *	3/2007	Dinh	A61B 17/7059 606/70
7,857,838	B2	12/2010	Orbay	
7,867,265	B2	1/2011	Beutter	

(Continued)

Primary Examiner — Larry E Waggle, Jr.
(74) *Attorney, Agent, or Firm* — Christopher L. Makay

(57) **ABSTRACT**

An orthopedic bone plate constructed from shape memory material provides the ability to move from an open shape to a compressed shape and create compression on two bones or bone fragments to encourage healing. The plate may be any number of shapes, with two or more screws anchoring the plate to bone. The plate is affixed to bone in a sequence of steps that involve first placing the plate on an insertion tool, attaching drill guide tubes, placing the plate over bone, drill holes in bone, and then attaching the plate to the bone via screws. The insertion tool can then be removed at the surgeon's convenience allowing compression on the two bones.
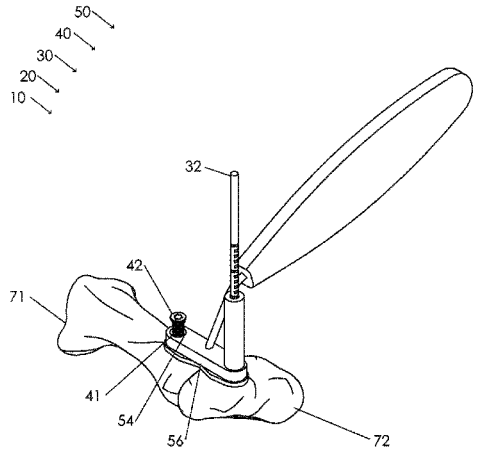
16 Claims, 16 Drawing Sheets