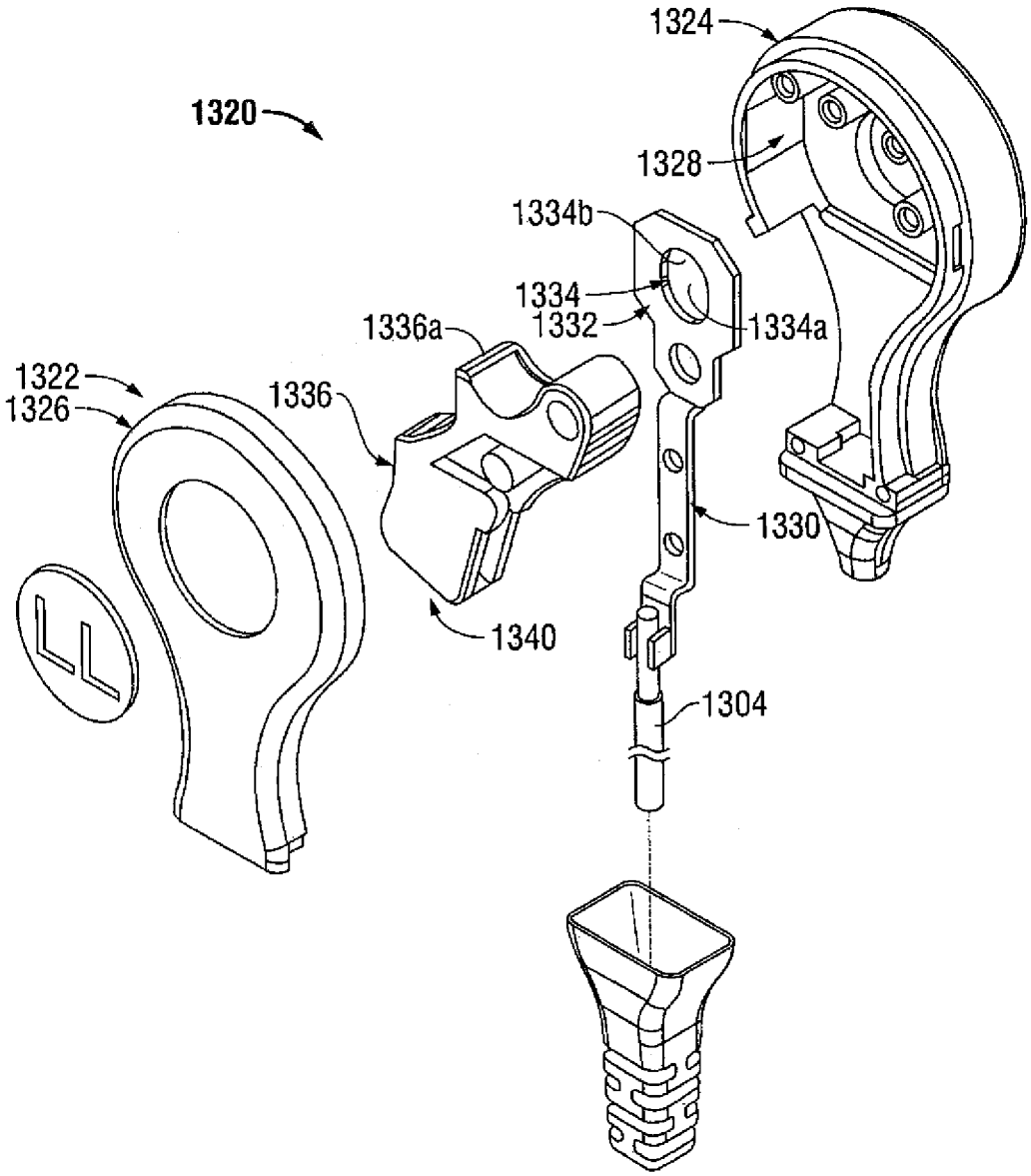

Fig. 1
Prior Art