US005708247A

United States Patent [19]

McAleer et al.

[11] Patent Number: 5,708,247

[45] Date of Patent: Jan. 13, 1998

[54] **DISPOSABLE GLUCOSE TEST STRIPS, AND METHODS AND COMPOSITIONS FOR MAKING SAME**

[75] Inventors: **Jerome F. McAleer**, Wantage; **David Scott**, Witney; **Geoff Hall**, Inverness; **Manuel Alvarez-Icaza**, Inverness; **Elliot V. Plotkin**, Inverness, all of United Kingdom

[73] Assignee: **Selfcare, Inc.**, Waltham, Mass.

[21] Appl. No.: **601,223**

[22] Filed: **Feb. 14, 1996**

[51] **Int. Cl.**[6] **G01N 27/26**

[52] **U.S. Cl.** **204/403**; 204/415; 204/418; 435/287.1; 435/289.1; 435/817; 435/4; 435/14

[58] **Field of Search** 204/403, 415, 204/418; 435/288, 291, 817, 4, 14, 287.1, 289.1

[56] **References Cited**

U.S. PATENT DOCUMENTS

4,195,129	3/1980	Fukui et al.	435/182
4,418,148	11/1983	Oberhardt	435/179
4,655,880	4/1987	Liu	204/1 T
4,876,205	10/1989	Green et al.	436/66
4,966,671	10/1990	Nylander et al.	204/153.14
5,120,420	6/1992	Nankai et al.	204/403
5,124,253	6/1992	Foulds et al.	435/21
5,126,034	6/1992	Carter et al.	204/403
5,141,868	8/1992	Shanks et al.	435/288
5,262,035	11/1993	Gregg et al.	204/403
5,264,106	11/1993	McAleer et al.	204/403
5,286,362	2/1994	Hoenes et al.	204/403
5,288,636	2/1994	Pollman et al.	435/288
5,378,628	1/1995	Grätzel et al.	435/288
5,437,999	8/1995	Diebold et al.	435/288
5,565,085	10/1996	Ikeda et al.	204/403
5,582,697	12/1996	Ikeda et al.	204/403
5,582,698	12/1996	Flaherty et al.	204/403

FOREIGN PATENT DOCUMENTS

0127958	12/1984	European Pat. Off. .
0170375	2/1986	European Pat. Off. .
55-10581	1/1980	Japan .
55-10583	1/1980	Japan .
55-10584	1/1980	Japan .
55-12406	9/1980	Japan .
89/08713	9/1989	WIPO .
9427140	11/1994	WIPO .
9702847	1/1997	WIPO .

Primary Examiner—Bruce F. Bell
Attorney, Agent, or Firm—Oppedahl & Larson

[57] **ABSTRACT**

An improved disposable glucose test strip for use in a test meter of the type which receives a disposable test strip and a sample of blood from a patient and performs an electrochemical analysis is made using a working formulation containing a filler, an enzyme effective to oxidize glucose, e.g., glucose oxidase, and a mediator effective to transfer electrons from the enzyme. The working formulation is printed over a conductive carbon base layer to form a working electrode. The filler, for example a silica filler, is selected to have a balance of hydrophobicity and hydrophilicity such that one drying it forms a two-dimensional network on the surface of the conductive base layer. The response of this test strip is essentially temperature independent over relevant temperature ranges and is substantially insensitive to the hematocrit of the patient.
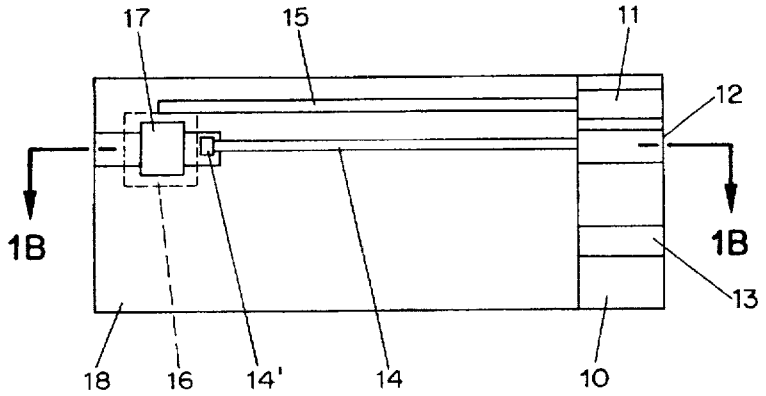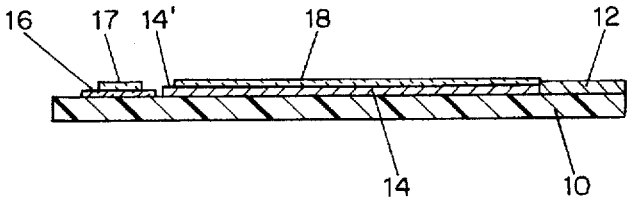
34 Claims, 6 Drawing Sheets