Dec. 22, 1942. R. W. ARMSTRONG ET AL 2,305,947

DIFFUSION PUMP

Filed Aug. 12, 1942

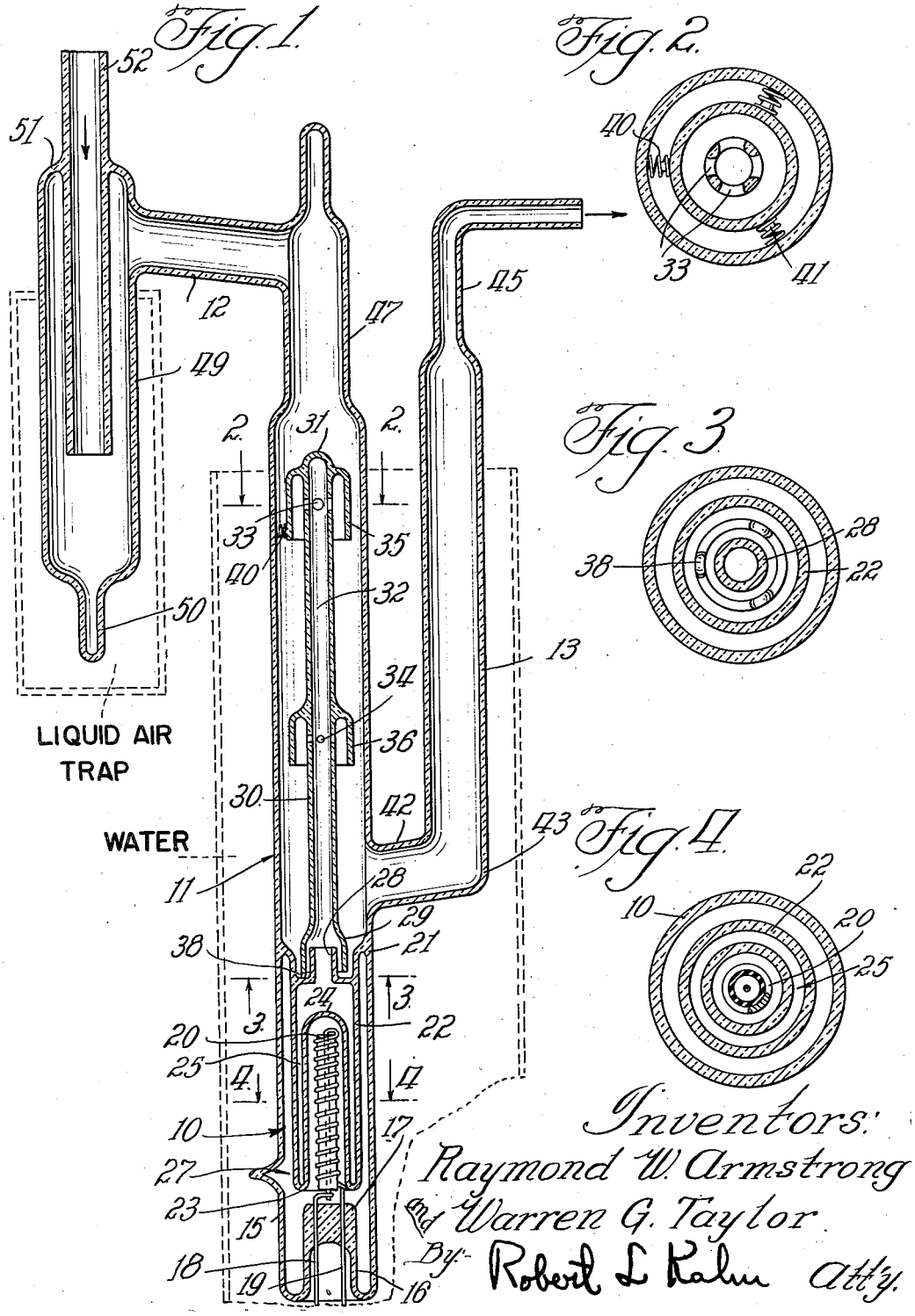

Inventors:
Raymond W. Armstrong
and Warren G. Taylor.
By Robert L. Kahn Att'y.