US009295546B2

(12) **United States Patent**
Cumming

(10) **Patent No.: US 9,295,546 B2**
(45) **Date of Patent: Mar. 29, 2016**

(54) **ANTERIOR CAPSULE DEFLECTOR RIDGE**

(71) Applicant: **James Stuart Cumming**, Laguna Beach, CA (US)

(72) Inventor: **James Stuart Cumming**, Laguna Beach, CA (US)

(*) Notice: Subject to any disclaimer, the term of this patent is extended or adjusted under 35 U.S.C. 154(b) by 91 days.

(21) Appl. No.: **14/035,813**

(22) Filed: **Sep. 24, 2013**

(65) **Prior Publication Data**

US 2015/0088254 A1 Mar. 26, 2015

(51) **Int. Cl.**
A61F 2/16 (2006.01)

(52) **U.S. Cl.**
CPC ***A61F 2/1635*** (2013.01); ***A61F 2/1629*** (2013.01); *A61F 2002/1689* (2013.01); *A61F 2220/0091* (2013.01); *A61F 2250/0036* (2013.01)

(58) **Field of Classification Search**
CPC A61F 2/14; A61F 2/16; A61F 2/1613; A61F 2/1616; A61F 2/1618; A61F 2/1624; A61F 2/1629; A61F 2/1635; A61F 2002/1681; A61F 2002/1689
See application file for complete search history.

(56) **References Cited**

U.S. PATENT DOCUMENTS

2,834,023	A	5/1958	Lieb
4,073,014	A	2/1978	Poler
4,118,808	A	10/1978	Poler
4,122,556	A	10/1978	Poler
4,159,546	A	7/1979	Shearing
4,168,547	A	9/1979	Konstantinov et al.
4,173,798	A	11/1979	Welsh
4,174,543	A	11/1979	Kelman
4,206,518	A	6/1980	Jardon et al.
4,244,060	A	1/1981	Hoffer
4,254,509	A	3/1981	Tennant
4,277,851	A	7/1981	Choyce
4,298,995	A	11/1981	Poler
4,304,012	A	12/1981	Richard
4,409,690	A	10/1983	Gess
4,409,691	A	10/1983	Levy
4,424,597	A	1/1984	Schlegel
4,441,217	A	4/1984	Cozean, Jr.
4,477,931	A	10/1984	Kelman
4,573,998	A	3/1986	Mazzocco
4,585,457	A	4/1986	Kalb
4,605,411	A	8/1986	Fedorov et al.
4,629,462	A	12/1986	Feaster
4,648,878	A	3/1987	Kelman
4,664,665	A	5/1987	Reuss et al.
4,664,666	A	5/1987	Barrett

(Continued)

FOREIGN PATENT DOCUMENTS

CA	2110184	A1	12/1992
CH	681687		5/1993

(Continued)

OTHER PUBLICATIONS

Dykstra, M., et al. Biological Electron Microscopy: Theory, Techniques, and Troubleshooting, 2003, p. 81.

(Continued)

Primary Examiner — Andrew Iwamaye
Assistant Examiner — Leslie Lopez
(74) *Attorney, Agent, or Firm* — Knobbe Martens Olson & Bear LLP

(57) **ABSTRACT**

An intraocular lens designed to separate and prevent fibrosis of the anterior capsular rim with the posterior capsule where it surrounds the optic.
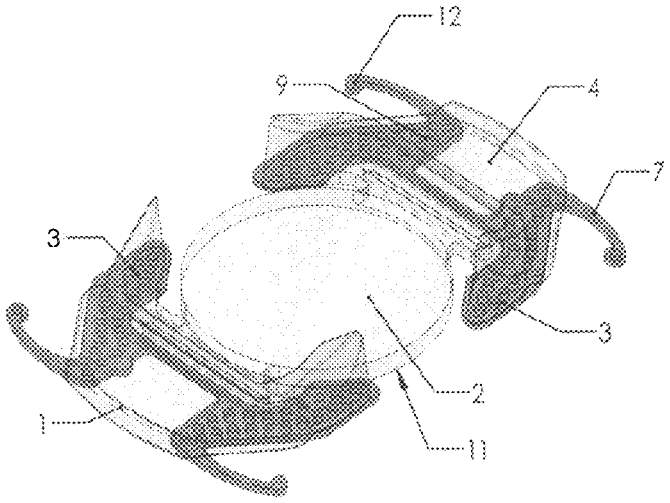
12 Claims, 1 Drawing Sheet