US005863146A

United States Patent [19]

Denkins et al.

[11] **Patent Number: 5,863,146**

[45] **Date of Patent: Jan. 26, 1999**

[54] **APPARATUS FOR APPLYING JOINT COMPOUND**

[75] Inventors: **Jeffrey L. Denkins**; **Steven J. Mondlock**, both of Kaukauna, Wis.

[73] Assignee: **Apla-Tech, Inc.**, Kaukauna, Wis.

[21] Appl. No.: **659,284**

[22] Filed: **Jun. 6, 1996**

[51] **Int. Cl.**[6] **B05C 17/015**

[52] **U.S. Cl.** ..... **401/188 R**; 401/171; 401/176; 401/266; 401/263

[58] **Field of Search** ..... 401/171, 176, 401/187, 188 R, 266, 263; 222/389, 391

[56] **References Cited**

U.S. PATENT DOCUMENTS

2,502,499	4/1950	Ames	216/22
2,815,142	12/1957	Ames	216/25
3,007,837	11/1961	Goode	156/461
3,116,195	12/1963	Lathrop et al.	156/575
3,131,108	4/1964	Kennard	156/461
3,188,262	6/1965	Torrison	156/575
3,374,049	3/1968	Taylor	401/171
3,707,427	12/1972	Erickson	156/575
3,921,858	11/1975	Bemm	401/188 R X
4,080,240	3/1978	Dysart	156/575
4,086,121	4/1978	Ames	156/526
4,090,914	5/1978	Hauk et al.	156/523
4,105,490	8/1978	Lass	156/526
4,127,434	11/1978	Lass	156/526
4,309,238	1/1982	Hauk	156/575
4,358,337	11/1982	Johnson	156/526
4,516,868	5/1985	Molnar	401/5
4,732,503	3/1988	Bader et al.	401/197
5,169,160	12/1992	Gaskill et al.	277/68
5,279,700	1/1994	Retti	156/578
5,465,881	11/1995	Zwicky	222/389

FOREIGN PATENT DOCUMENTS

710121	5/1965	Canada	222/391
1031738	6/1958	Germany	222/389

Primary Examiner—Steven A. Bratlie

Attorney, Agent, or Firm—Andrus, Sceales, Starke & Sawall

[57] **ABSTRACT**

An apparatus for applying joint compound is externally powered, preferably using compressed air. The preferred apparatus has a hollow tubular storage body that is connected to a supply of compressed air, and a movable plunger positioned within the hollow tubular storage body. The plunger has a pair of rubber seals that contact the inner wall of the storage body. A supply of joint compound is inserted into the storage body on the side of the plunger opposite the side of the plunger that can be exposed to pressurized air. Pressurized air can be supplied by the user against the plunger to push the supply of joint compound out of the storage body through a mud supply head. An applicator tip is connected to the mud supply head and can be connected to either a flat joint attachment or a corner joint attachment. Alternatively, other attachments can be used such as a texture gun attachment, a fireproofing attachment, or a water cleaning attachment.
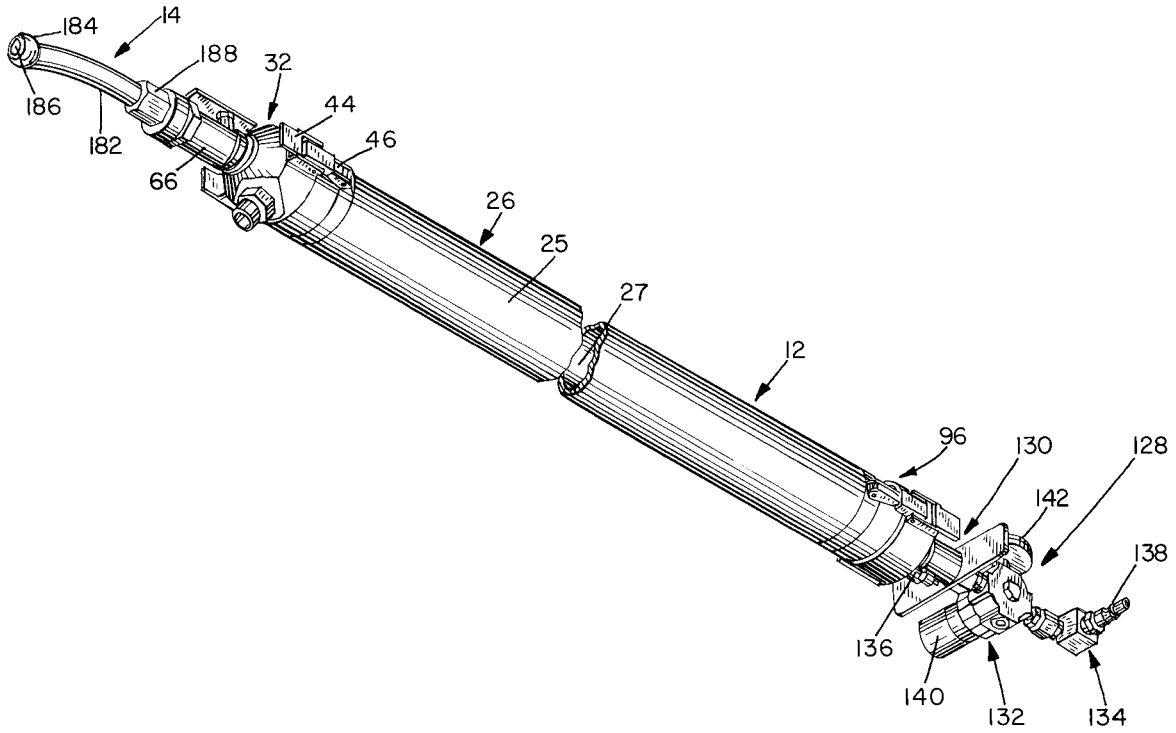
31 Claims, 5 Drawing Sheets