US007758846B2

(12) **United States Patent**
Dagle et al.

(10) **Patent No.: US 7,758,846 B2**
(45) **Date of Patent: Jul. 20, 2010**

(54) **METHODS OF PRODUCING HYDROGEN VIA THE WATER-GAS SHIFT REACTION OVER A PD-ZN CATALYST**

(75) Inventors: **Robert A. Dagle**, Richland, WA (US); **Yong Wang**, Richland, WA (US); **Jianli Hu**, Kennewick, WA (US)

(73) Assignee: **Battelle Memorial Institute**, Richland, WA (US)

(*) Notice: Subject to any disclaimer, the term of this patent is extended or adjusted under 35 U.S.C. 154(b) by 1086 days.

(21) Appl. No.: **11/305,840**

(22) Filed: **Dec. 16, 2005**

(65) **Prior Publication Data**

US 2007/0140956 A1 Jun. 21, 2007

(51) **Int. Cl.**
C01B 3/18 (2006.01)
C01B 3/26 (2006.01)

(52) **U.S. Cl.** **423/656**; 423/651

(58) **Field of Classification Search** 423/656
See application file for complete search history.

(56) **References Cited**

U.S. PATENT DOCUMENTS

2002/0031471 A1* 3/2002 Tonkovich et al. 423/652
2002/0114762 A1* 8/2002 Wang et al. 423/656
2003/0157019 A1* 8/2003 Kushida et al. 423/648.1
2004/0223908 A1* 11/2004 Holladay et al. 423/648.1

FOREIGN PATENT DOCUMENTS

FR 2567866 A1 7/1984
WO 0226618 A2 4/2002
WO WO 03020410 A1 * 3/2003

OTHER PUBLICATIONS

Wang, et al., XP-002444841, Journal of Catalysis, vol. 212, 2002, pp. 225-230.
PCT Written Opinion for PCT/US2006/047939.

* cited by examiner

Primary Examiner—Melvin C Mayes
Assistant Examiner—Kenneth Vaden
(74) *Attorney, Agent, or Firm*—Derek H. Maughan; Frank Rosenberg

(57) **ABSTRACT**

Methods for producing hydrogen via the water-gas shift reaction utilizing a palladium-zinc on alumina catalyst are described.
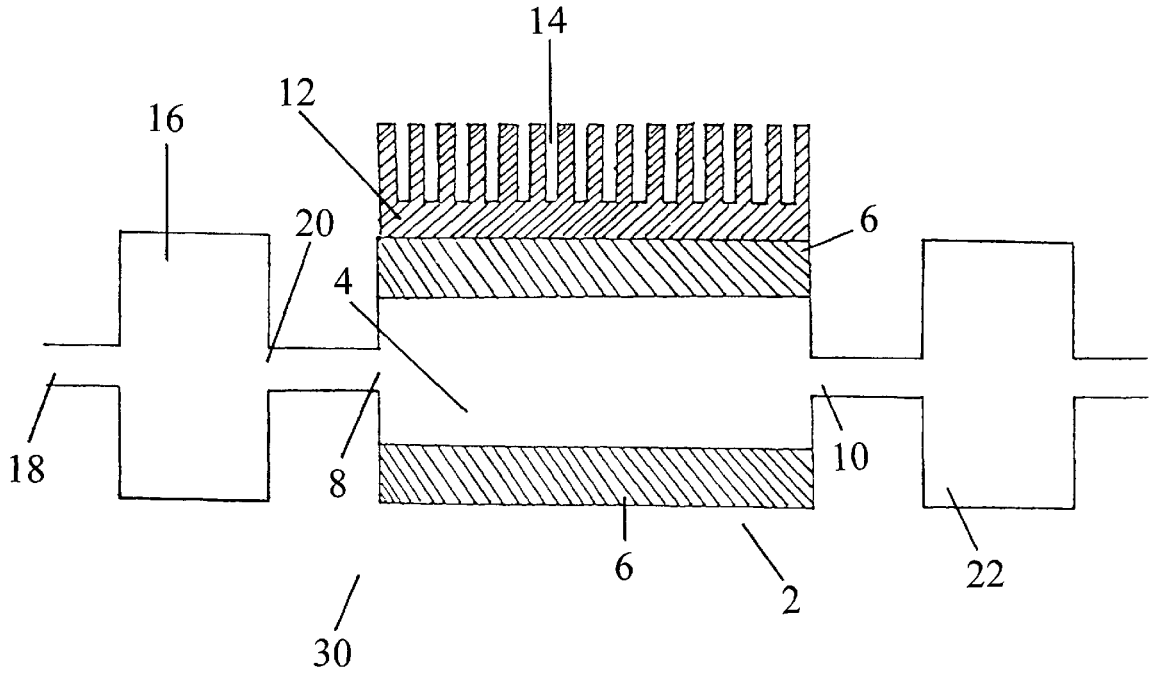
18 Claims, 3 Drawing Sheets