US006645246B1

(12) **United States Patent**
Weinschenk, III et al.

(10) **Patent No.: US 6,645,246 B1**
(45) **Date of Patent: Nov. 11, 2003**

(54) **INTRAOCULAR LENS WITH SURROUNDED LENS ZONE**

(75) Inventors: **Joseph I. Weinschenk, III**, Ft. Worth, TX (US); **Charles X. Liao**, Irvine, CA (US); **Massoud Ghazizadeh**, Laguna Niguel, CA (US)

(73) Assignee: **Advanced Medical Optics, Inc.**, Santa Ana, CA (US)

(*) Notice: Subject to any disclaimer, the term of this patent is extended or adjusted under 35 U.S.C. 154(b) by 161 days.

(21) Appl. No.: **09/657,325**

(22) Filed: **Sep. 7, 2000**

Related U.S. Application Data

(60) Provisional application No. 60/154,554, filed on Sep. 17, 1999.

(51) **Int. Cl.**[7] **A61F 2/16**

(52) **U.S. Cl.** **623/6.37**; 623/6.13; 623/6.22; 623/6.27

(58) **Field of Search** 623/6.13, 6.22, 623/6.27, 6.37; A61F 2/16

(56) **References Cited**

U.S. PATENT DOCUMENTS

1,483,509	A	2/1924	Bugbee
2,129,305	A	9/1938	Feinbloom
2,274,142	A	2/1942	Houchin
2,405,989	A	6/1946	Beach
2,511,517	A	6/1950	Spiegel
3,031,927	A	5/1962	Wesley
3,034,403	A	5/1962	Neefe
RE25,286	E	11/1962	Decarle
3,210,894	A	10/1965	Bentley et al.
3,227,507	A	1/1966	Feinbloom
3,339,997	A	9/1967	Wesley
3,420,006	A	1/1969	Barnett
3,431,327	A	3/1969	Tsuetaki
3,482,906	A	12/1969	Volk
3,542,461	A	11/1970	Girard et al.

(List continued on next page.)

FOREIGN PATENT DOCUMENTS

AU	3225789	10/1989	
DE	2702117	7/1978	
DE	3246306	6/1984	
DE	101 25 829 A1 *	11/2002	..... A61F/2/16
EP	0246216	11/1987	
EP	0329981	8/1989	
EP	0337390	10/1989	
EP	0342895	11/1989	
EP	0351471	1/1990	
EP	0566170	10/1993	

(List continued on next page.)

OTHER PUBLICATIONS

Thornton, Accommodation in Pseudophakia, 25, pp. 159–162.

Video Tape "New Elliptical Acco. IOL for Cataract Surgery," shown at ASCRS Symposium on Apr. 10, 1999 (Video Enclosed).

(List continued on next page.)

Primary Examiner—David H. Willse
Assistant Examiner—Javier G. Blanco
(74) *Attorney, Agent, or Firm*—Peter J. Gluck

(57) **ABSTRACT**

An intraocular lens for use in a mammalian eye includes an optic adapted to focus light toward a retina of the mammalian eye and, in cooperation with the mammalian eye, to provide accommodation, the optic including a first portion adapted to move in response to the action of the mammalian eye; and a second portion surrounded by the first portion, and having a higher index of refraction than the first portion and/or being less deformable than the first portion in response to forces exerted by the mammalian eye.
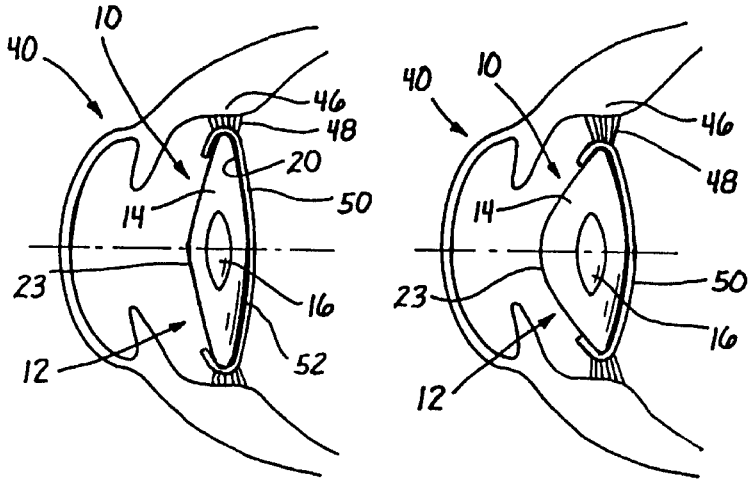
37 Claims, 2 Drawing Sheets