US005941246A

United States Patent [19]

Roopchand

[11] **Patent Number: 5,941,246**

[45] **Date of Patent: Aug. 24, 1999**

[54] **ENDOTRACHEAL TUBE SUPPORT**

[76] Inventor: **Roland Roopchand**, 100 Rose Drive, Elizabeth Gardens, St. Joseph, Trinidad/Tobago

[21] Appl. No.: **08/962,241**

[22] Filed: **Oct. 31, 1997**

[51] **Int. Cl.**[6] **A61M 16/00**; A62B 9/06

[52] **U.S. Cl.** **128/207.14**; 128/859; 128/861; D24/128

[58] **Field of Search** ..... 128/200.26, 201.26, 128/206.29, 207.14, 207.17, 911, 912, DIG. 26, 848, 859, 860, 861; D24/110, 127, 128, 156, 176, 180, 181, 190, 191

[56] **References Cited**

U.S. PATENT DOCUMENTS

803,475	10/1905	Dennis	601/164
4,261,354	4/1981	Nelson	128/203.23
4,275,725	6/1981	Nelson	128/207.14
4,289,127	9/1981	Nelson	128/207.14
4,329,984	5/1982	Kervin	128/207.14
4,425,911	1/1984	Luomanen et al.	128/200.26
4,495,945	1/1985	Liegner	128/200.26
4,896,667	1/1990	Magnuson et al.	128/207.14
5,195,513	3/1993	Sinko et al.	128/200.26
5,386,821	2/1995	Poterack	128/200.26
5,626,128	5/1997	Bradley et al.	128/200.26
5,638,811	6/1997	David	128/207.14
5,829,430	11/1998	Islava	128/200.26
5,862,801	1/1999	Wells	128/200.26
5,865,170	2/1999	Moles	128/201.26
5,884,625	3/1999	Hart	128/207.14

Primary Examiner—John G. Weiss
Assistant Examiner—Joseph F. Weiss, Jr.
Attorney, Agent, or Firm—Rogers & Scott

[57] **ABSTRACT**

An endotracheal tube support includes a mouthguard and a tube clip secured thereto. The mouthguard has a generally U-shape with a bottom wall and opposed side walls extending upwardly from opposite edges thereof to enable the mouthguard to be positioned over a patient's upper teeth or gum. The clip is of resilient material and has an elongated cylindrical shape with a longitudinally extending opening extending along the entire length thereof to enable an endotracheal tube to be snapped therethrough. The clip is secured beneath the mouthguard on one side thereof by a fastening device extending from the bottom wall of the mouthguard to a position on the clip substantially opposite the longitudinally extending opening therein.
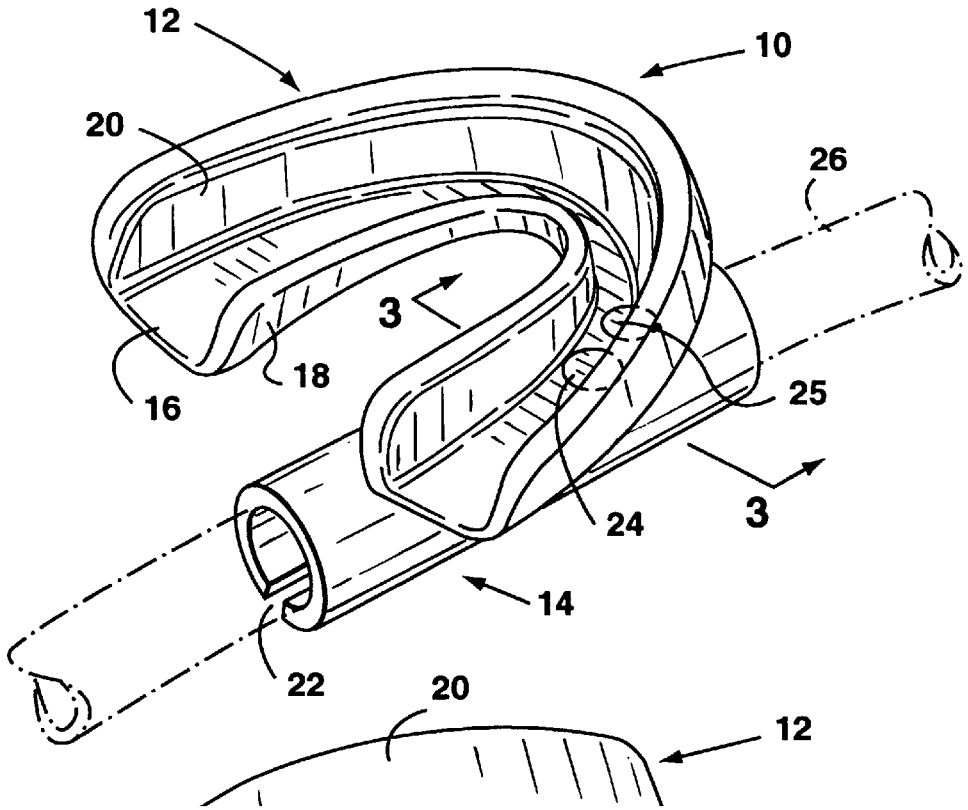
5 Claims, 1 Drawing Sheet