CIRCUMCISION CLAMP

Filed Aug. 12, 1960 2 Sheets-Sheet 2

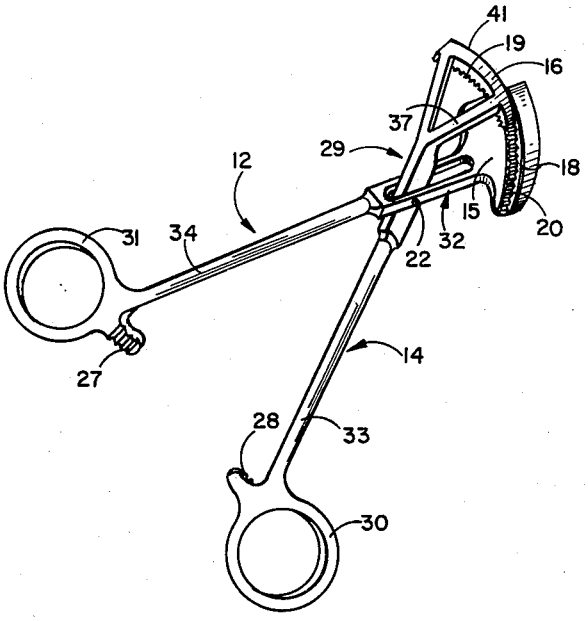

FIG. 3

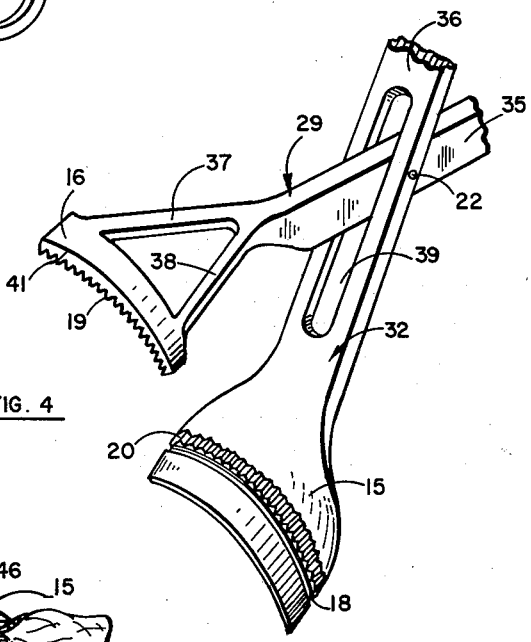

FIG. 4

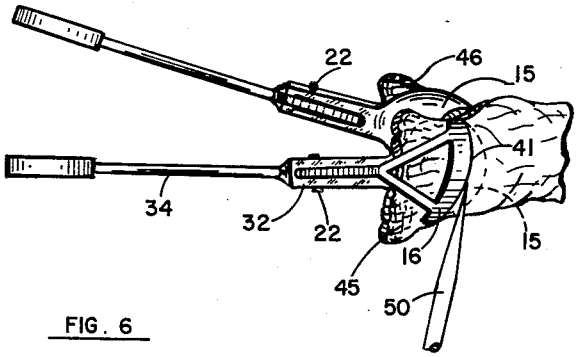

FIG. 6

INVENTOR.
MARTIN H. CHESTER
BY Edward A. Sokolski
AGENT