US009636246B2

(12) **United States Patent**
Frering

(10) **Patent No.: US 9,636,246 B2**
(45) **Date of Patent: May 2, 2017**

(54) **INFLATABLE AND ADJUSTABLE GASTRIC BAND FOR TREATING OBESITY**

(71) Applicant: **MEDICAL INNOVATION DEVELOPPEMENT**, Dardilly (FR)

(72) Inventor: **Vincent Frering**, Lyons (FR)

(73) Assignee: **MEDICAL INNOVATION DEVELOPPEMENT**, Dardilly (FR)

(*) Notice: Subject to any disclaimer, the term of this patent is extended or adjusted under 35 U.S.C. 154(b) by 338 days.

(21) Appl. No.: **14/350,931**

(22) PCT Filed: **Oct. 12, 2012**

(86) PCT No.: **PCT/EP2012/070350**
§ 371 (c)(1),
(2) Date: **Apr. 10, 2014**

(87) PCT Pub. No.: **WO2013/053929**
PCT Pub. Date: **Apr. 18, 2013**

(65) **Prior Publication Data**

US 2014/0257033 A1 Sep. 11, 2014

(30) **Foreign Application Priority Data**

Oct. 12, 2011 (FR) 11 59237

(51) **Int. Cl.**
A61F 5/00 (2006.01)
B29C 45/16 (2006.01)

(52) **U.S. Cl.**
CPC ***A61F 5/005*** (2013.01); ***A61F 5/003*** (2013.01); ***A61F 5/0056*** (2013.01); ***A61F 5/0066*** (2013.01); ***B29C 45/16*** (2013.01)

(58) **Field of Classification Search**
CPC A61F 5/003; A61F 5/0056; A61F 5/005; A61F 5/0066; B29C 45/16
See application file for complete search history.

(56) **References Cited**

U.S. PATENT DOCUMENTS

2007/0016231 A1* 1/2007 Jambor A61F 5/0066 606/157
2008/0294180 A1* 11/2008 Frering A61F 5/0066 606/157

(Continued)

FOREIGN PATENT DOCUMENTS

DE 197 51 733 12/1998
FR 2 887 436 12/2006

(Continued)

Primary Examiner — Christine H Matthews
Assistant Examiner — Joshua D Lannu
(74) *Attorney, Agent, or Firm* — Clark & Brody

(57) **ABSTRACT**

An inflatable, adjustable gastric band includes a flexible, hollow, resilient band; and a flexible inflation tube connected to the band and complementary closing means that are capable of mutually engaging so as to lock a ring in a closed position. The ring formed by bringing the distal end and the proximal end of the band together into a slipknot. The hollow band has, in an inoperative position, a preformed curved portion which is extended, by a substantially rectilinear portion, from the proximal end area thereof to the free distal end of the band. The substantially rectilinear portion being suitable for facilitating the insertion of the proximal end of the tube through the loop(s) of the band, and in that the hollow band has, on the outer wall thereof, two loops, said loops being arranged on the substantially rectilinear portion of the hollow band.
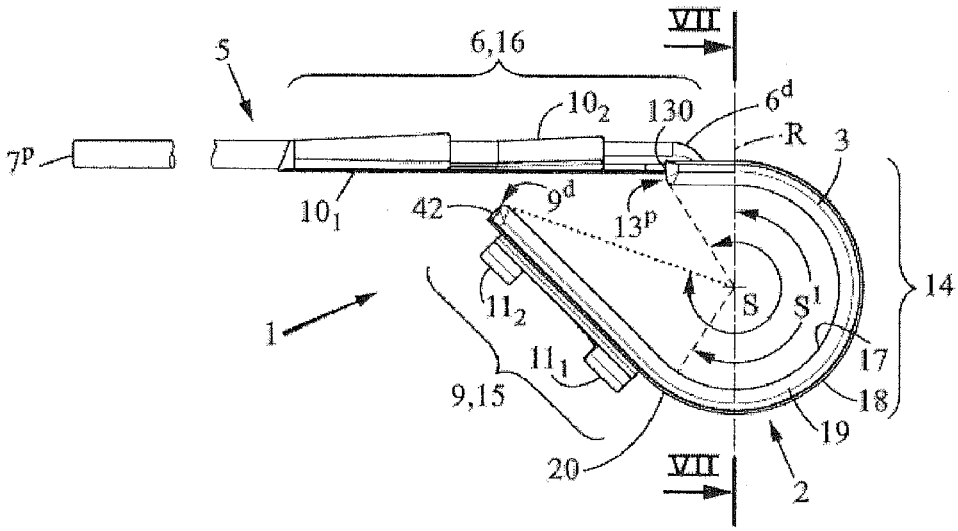
18 Claims, 8 Drawing Sheets