April 21, 1953 H. F. ENYEART ET AL 2,635,546

PUMP CONTROL

Filed Jan. 5, 1949 2 SHEETS—SHEET 1

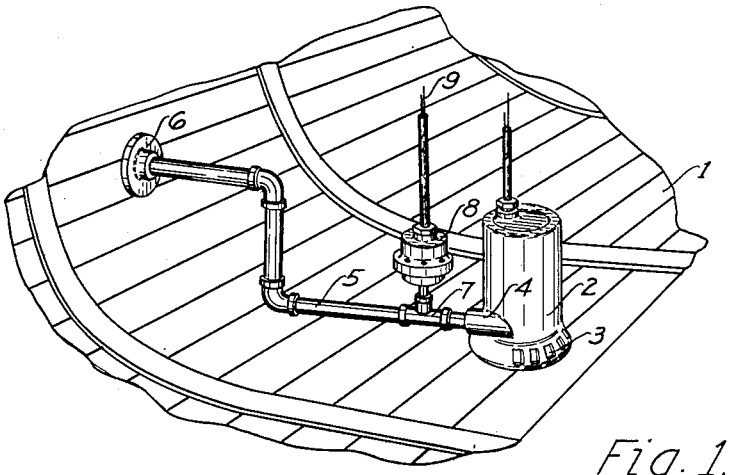

Fig. 1.

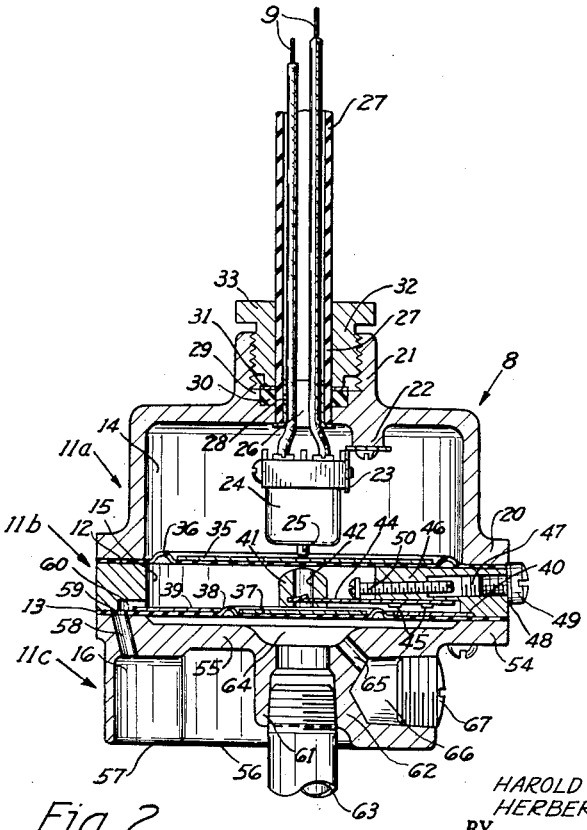

Fig. 2.

INVENTORS.
HAROLD F. ENYEART
HERBERT W. KAATZ
BY Bennett & Sessions
ATTORNEYS.