March 4, 1969 T. J. CONRAD ET AL 3,431,046

FLEXIBLE POLYETHYLENE CORNEAL CONTACT LENS

Filed Feb. 14, 1964

FIG. 1.

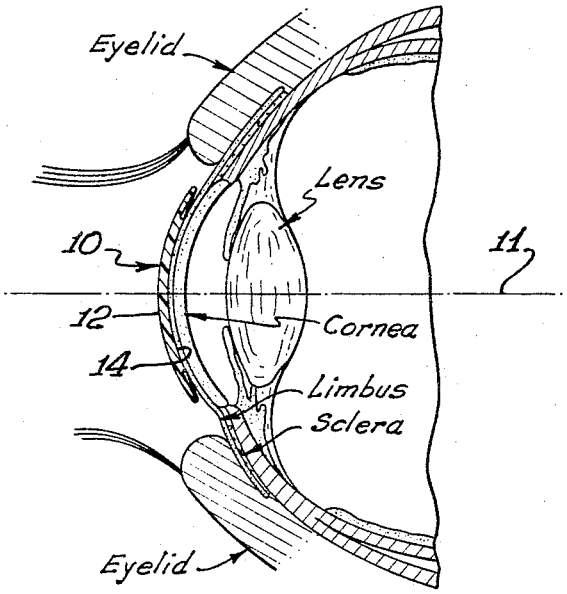


FIG. 4.

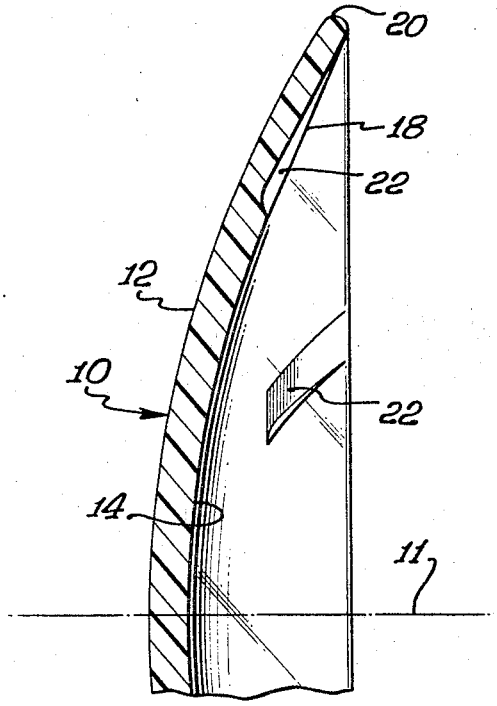


FIG. 2.

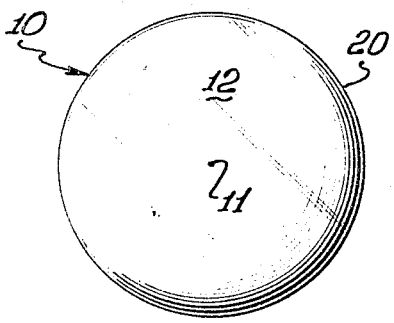


FIG. 3.

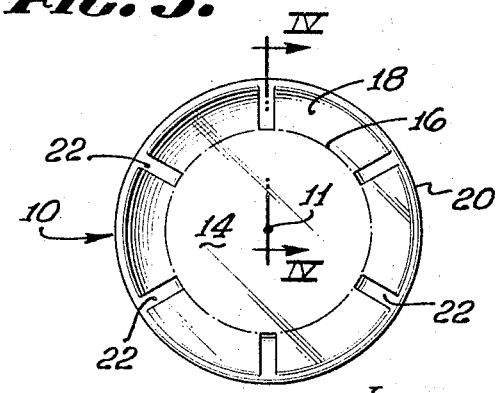


INVENTORS.
TOM J. CONRAD
GLENN O. DAYTON, JR.
MAX ARLIN
BY
Miketta and Glenny
ATTORNEYS.