US009330046B2

(12) **United States Patent**
Keegan et al.

(10) **Patent No.: US 9,330,046 B2**
(45) **Date of Patent: May 3, 2016**

(54) **PORTABLE INSTRUMENT AND DOCKING STATION WITH DIVIDED UNIVERSAL SERIAL BUS COMMUNICATION DEVICE**

(71) Applicant: **Welch Allyn, Inc.**, Skaneateles Falls, NY (US)

(72) Inventors: **Christopher M. Keegan**, Marcellus, NY (US); **Kenneth V. Coon, III**, Jordan, NY (US); **Christopher M. Haigney**, Syracuse, NY (US); **Miguel C. Mudge**, Syracuse, NY (US)

(73) Assignee: **Welch Allyn, Inc.**, Skaneateles Falls, NY (US)

(*) Notice: Subject to any disclaimer, the term of this patent is extended or adjusted under 35 U.S.C. 154(b) by 667 days.

(21) Appl. No.: **13/740,455**

(22) Filed: **Jan. 14, 2013**

(65) **Prior Publication Data**

US 2014/0201414 A1 Jul. 17, 2014

(51) **Int. Cl.**

G06F 13/40	(2006.01)
G06F 1/16	(2006.01)
G06F 19/00	(2011.01)

(52) **U.S. Cl.**

CPC ***G06F 13/4081*** (2013.01); *A61B 2560/0456* (2013.01); *G06F 1/1632* (2013.01); *G06F 19/3418* (2013.01)

(58) **Field of Classification Search**

CPC G06F 1/1613; G06F 1/1626; G06F 1/1632
See application file for complete search history.

(56) **References Cited**

U.S. PATENT DOCUMENTS

6,393,431	B1 *	5/2002	Salvati	A61B 1/00041
6,770,028	B1 *	8/2004	Ali	A61B 5/0002 600/300
7,188,621	B2 *	3/2007	DeVries	A61M 16/206 128/200.24
7,386,868	B2	6/2008	McCormack	
7,530,949	B2 *	5/2009	Al Ali	A61B 5/0002 600/300
7,575,555	B1	8/2009	Bryant	
7,787,014	B2 *	8/2010	Serceki	G01N 23/04 348/207.1
7,873,772	B2 *	1/2011	Waldhoff	A61B 5/0002 439/38
D631,869	S	2/2011	Yamamoto	
7,976,337	B1	7/2011	Cortopassi et al.	

(Continued)

FOREIGN PATENT DOCUMENTS

DE	198 14 356 A1	10/1999
DE	20 2005 000 172 U1	4/2005

(Continued)

OTHER PUBLICATIONS

Datalogic ADC—Mobile, http://www.geminicomputersinc.coin/dtl-95a151047.html, 4 pages (Date Accessed: Jun. 7, 2012).

(Continued)

Primary Examiner — Brian Misiura
(74) *Attorney, Agent, or Firm* — Merchant & Gould P.C.

(57) **ABSTRACT**

A universal serial bus (USB) communication system includes a portable instrument and a docking station that communicate with a host device using a divided USB communication device. A first portion of the USB communication device is provided in the portable instrument. A second portion of the USB communication device is provided in the docking station. The first portion includes a non-USB communication device that communicates with the second portion in a non-USB format. The second portion converts the communications into a USB format suitable for the host device.
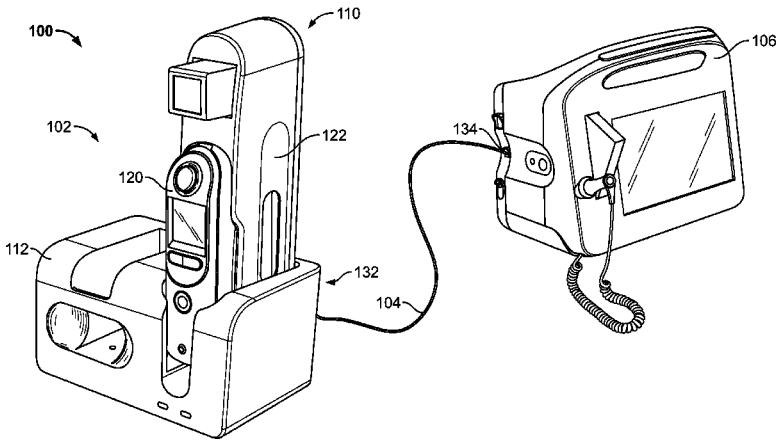
10 Claims, 9 Drawing Sheets