US005722546A

United States Patent [19]

Briere

[11] **Patent Number: 5,722,546**

[45] **Date of Patent: Mar. 3, 1998**

[54] **CHILD-RESISTANT CLOSURE AND CONTAINER**

[75] Inventor: **Marc Briere**, Newburgh, Ind.

[73] Assignee: **Rexam Closures Inc.**, Evansville, Ind.

[21] Appl. No.: **766,527**

[22] Filed: **Dec. 13, 1996**

[51] **Int. Cl.**[6] **B65D 55/02**

[52] **U.S. Cl.** **215/216**; 215/221

[58] **Field of Search** 215/216, 217, 215/219, 221, 223, 330

[56] **References Cited**

U.S. PATENT DOCUMENTS

3,989,152 11/1976 Julian 215/216
4,149,646 4/1979 Julian 215/216
4,752,014 6/1988 House et al. 215/216
5,462,182 10/1995 Opresco 215/216
5,560,505 10/1996 Schneider et al. 215/330
5,577,624 11/1996 Berta et al. 215/221

Primary Examiner—Stephen Cronin
Attorney, Agent, or Firm—Gifford, Krass, Groh, Sprinkle, Patmore, Anderson & Citkowski, P.C.

[57] **ABSTRACT**

A child-resistant closure and container package having push tabs formed in the closure to prevent rotation relative to the container until the push tabs are deflected radially inwardly to disengage from lock members on the container to permit unthreading rotation of the closure relative to the container. Simultaneous squeezing of the push tabs and rotation of the closure permit removal of the closure from the container. Also, a tamper indicating feature is associated with the push tabs.
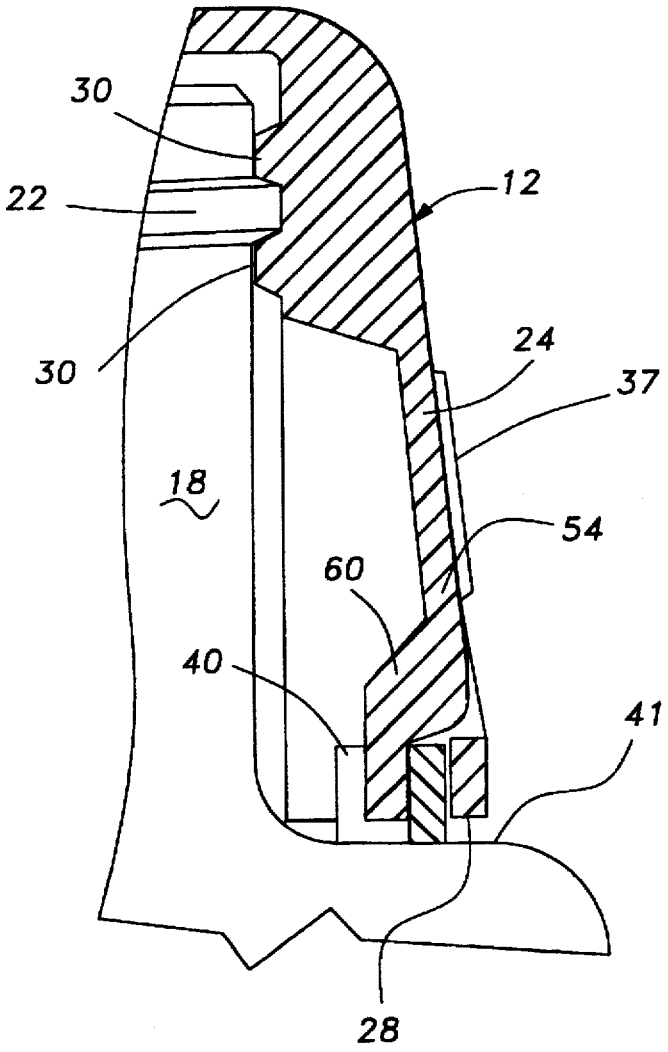
12 Claims, 2 Drawing Sheets